HDMI RX

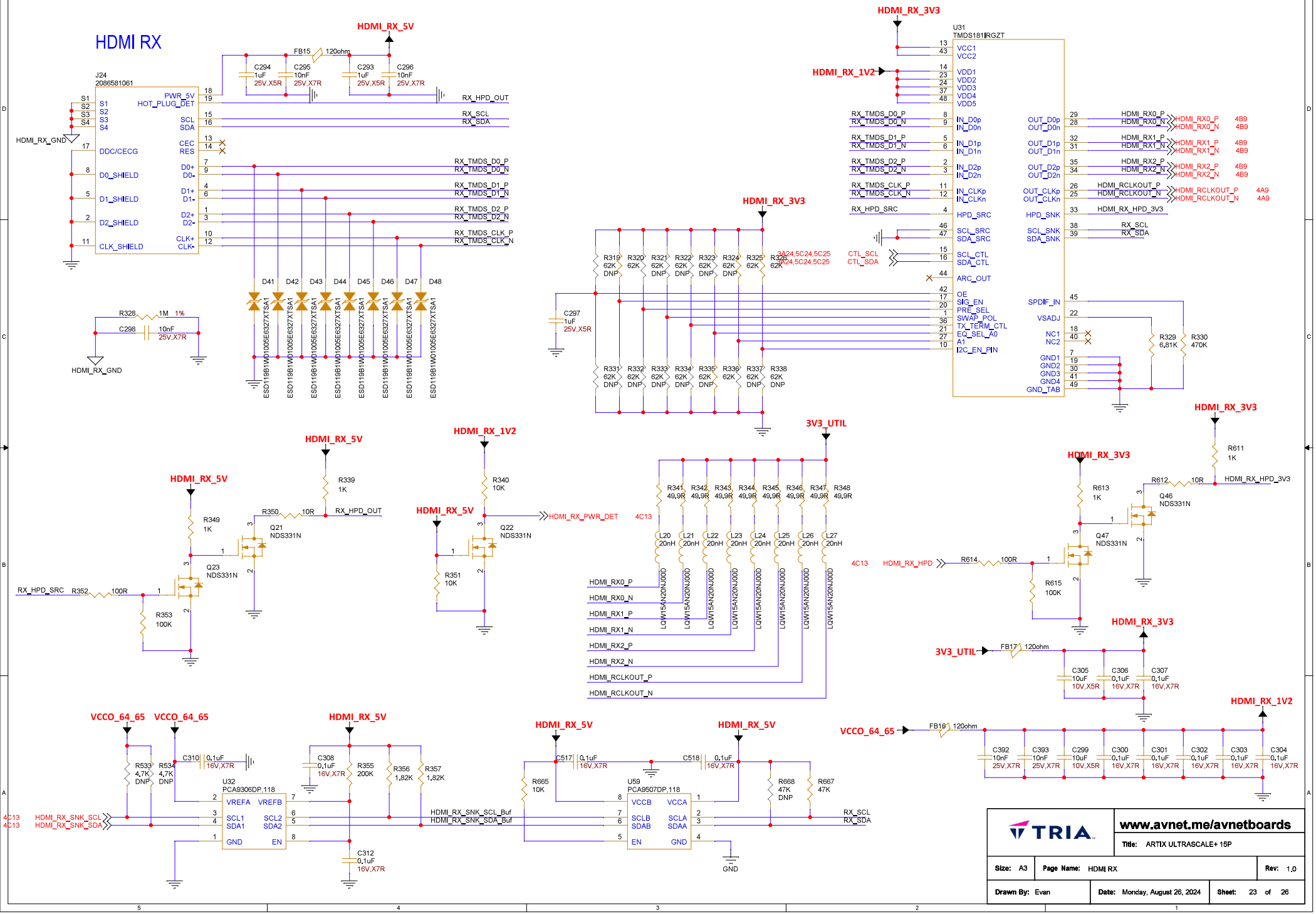

TRIA	www.avnet.me/avnetboards	
	Title: ARTIX ULTRASCALE+ 15P	
Size: A3	Page Name: HDMI RX	Rev: 1.0
Drawn By: Evan	Date: Monday, August 26, 2024	Sheet: 23 of 26

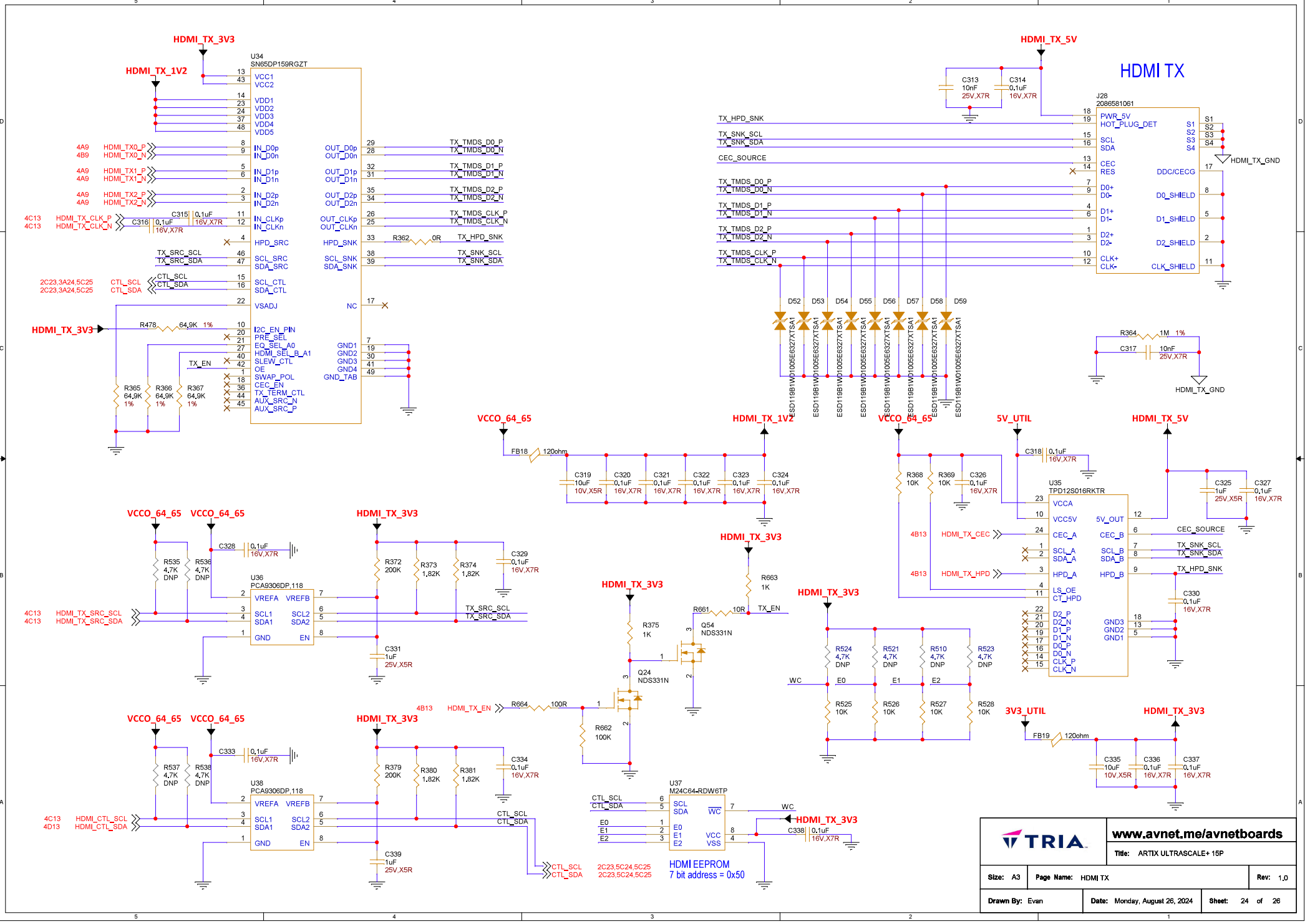
HDMI TX
U34
SN65DP159RGZT
HDMI_TX_3V3
HDMI_TX_1V2
HDMI_TX_5V
J28
2086581061
HDMI_TX_GND
U35
TPD12S016RKTR
U36
PCA9306DP,118
U38
PCA9306DP,118
U37
M24C64-RDW6TP
HDMI EEPROM
7 bit address = 0x50
VCCO_64_65
5V_UTIL
3V3_UTIL
TX_HPD_SNK
TX_SNK_SCL
TX_SNK_SDA
CEC_SOURCE
TX_TMDS_D0_P
TX_TMDS_D0_N
TX_TMDS_D1_P
TX_TMDS_D1_N
TX_TMDS_D2_P
TX_TMDS_D2_N
TX_TMDS_CLK_P
TX_TMDS_CLK_N
TX_SRC_SCL
TX_SRC_SDA
TX_EN
HDMI_TX_CEC
HDMI_TX_HPD
HDMI_TX_EN
HDMI_TX_SRC_SCL
HDMI_TX_SRC_SDA
HDMI_CTL_SCL
HDMI_CTL_SDA
CTL_SCL
CTL_SDA
WC
TRIA
www.avnet.me/avnetboards
Title: ARTIX ULTRASCALE+ 15P
Size: A3
Page Name: HDMI TX
Rev: 1.0
Drawn By: Evan
Date: Monday, August 26, 2024
Sheet: 24 of 26

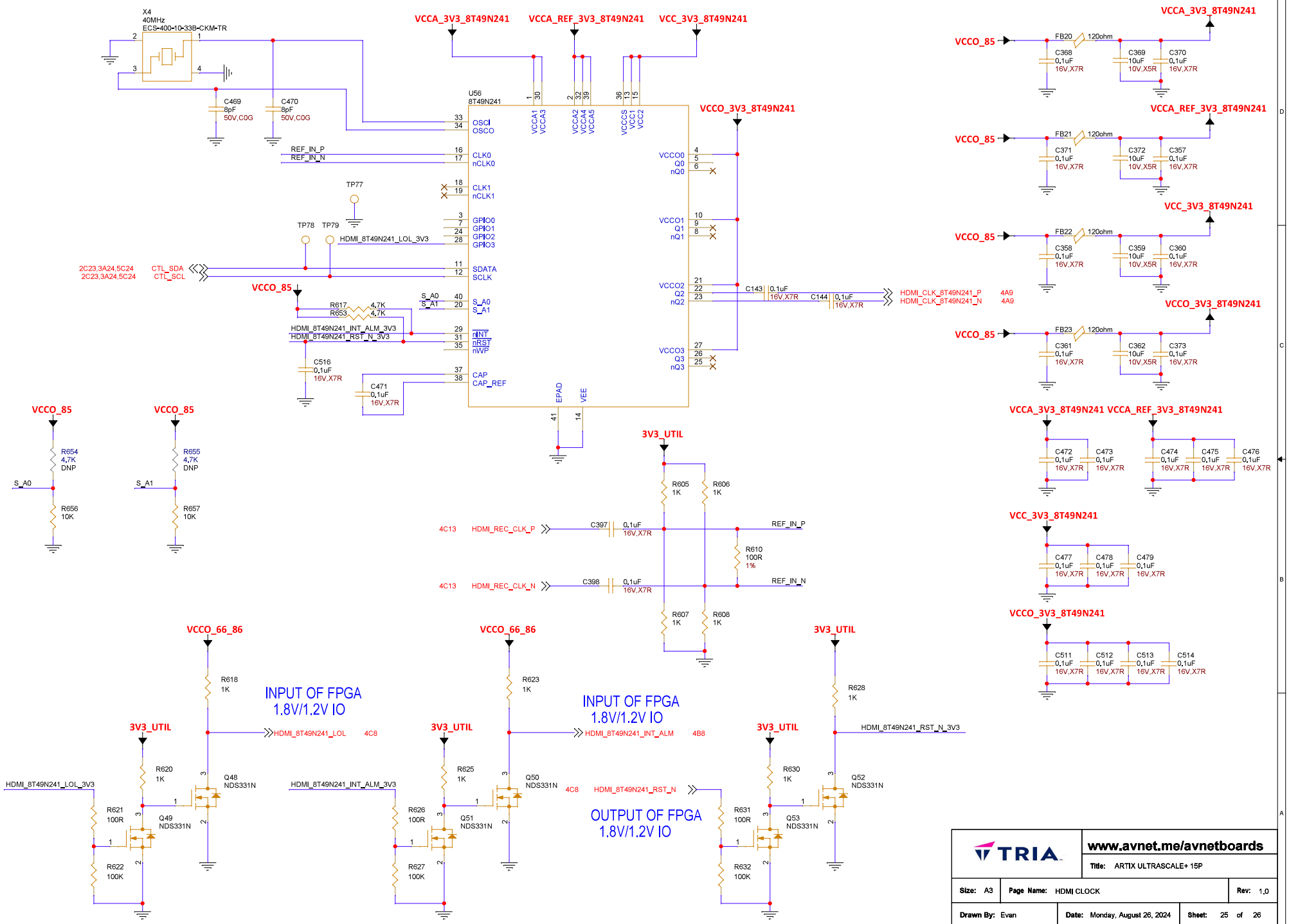
X4
40MHz
ECS-400-10-33B-CKM-TR
C469
8pF
50V,C0G
C470
8pF
50V,C0G
U56
8T49N241
VCCA_3V3_8T49N241
VCCA_REF_3V3_8T49N241
VCC_3V3_8T49N241
VCCO_3V3_8T49N241
OSCI
OSCO
REF_IN_P
REF_IN_N
CLK0
nCLK0
CLK1
nCLK1
TP77
TP78
TP79
GPIO0
GPIO1
GPIO2
GPIO3
HDMI_8T49N241_LOL_3V3
2C23,3A24,5C24
CTL_SDA
CTL_SCL
SDATA
SCLK
VCCO_85
R617
4.7K
R653
4.7K
S_A0
S_A1
HDMI_8T49N241_INT_ALM_3V3
HDMI_8T49N241_RST_N_3V3
nINT
nRST
nWP
C516
0.1uF
16V,X7R
C471
0.1uF
16V,X7R
CAP
CAP_REF
EPAD
VEE
VCCO0
Q0
nQ0
VCCO1
Q1
nQ1
VCCO2
Q2
nQ2
VCCO3
Q3
nQ3
C143
0.1uF
16V,X7R
C144
0.1uF
16V,X7R
HDMI_CLK_8T49N241_P
HDMI_CLK_8T49N241_N
4A9
FB20
120ohm
FB21
FB22
FB23
C368
C369
C370
C371
C372
C357
C358
C359
C360
C361
C362
C373
10uF
10V,X5R
VCCO_85
R654
4.7K
DNP
R656
10K
R655
4.7K
DNP
R657
10K
C472
C473
C474
C475
C476
C477
C478
C479
C511
C512
C513
C514
3V3_UTIL
R605
1K
R606
1K
R607
1K
R608
1K
4C13
HDMI_REC_CLK_P
HDMI_REC_CLK_N
C397
C398
R610
100R
1%
VCCO_66_86
R618
1K
INPUT OF FPGA
1.8V/1.2V IO
HDMI_8T49N241_LOL
4C8
R620
1K
R621
100R
R622
100K
Q48
NDS331N
Q49
NDS331N
R623
1K
HDMI_8T49N241_INT_ALM
4B8
R625
1K
R626
100R
R627
100K
Q50
NDS331N
Q51
NDS331N
R628
1K
HDMI_8T49N241_RST_N_3V3
HDMI_8T49N241_RST_N
OUTPUT OF FPGA
1.8V/1.2V IO
R630
1K
R631
100R
R632
100K
Q52
NDS331N
Q53
NDS331N
TRIA
www.avnet.me/avnetboards
Title: ARTIX ULTRASCALE+ 15P
Size: A3
Page Name: HDMI CLOCK
Rev: 1.0
Drawn By: Evan
Date: Monday, August 26, 2024
Sheet: 25 of 26