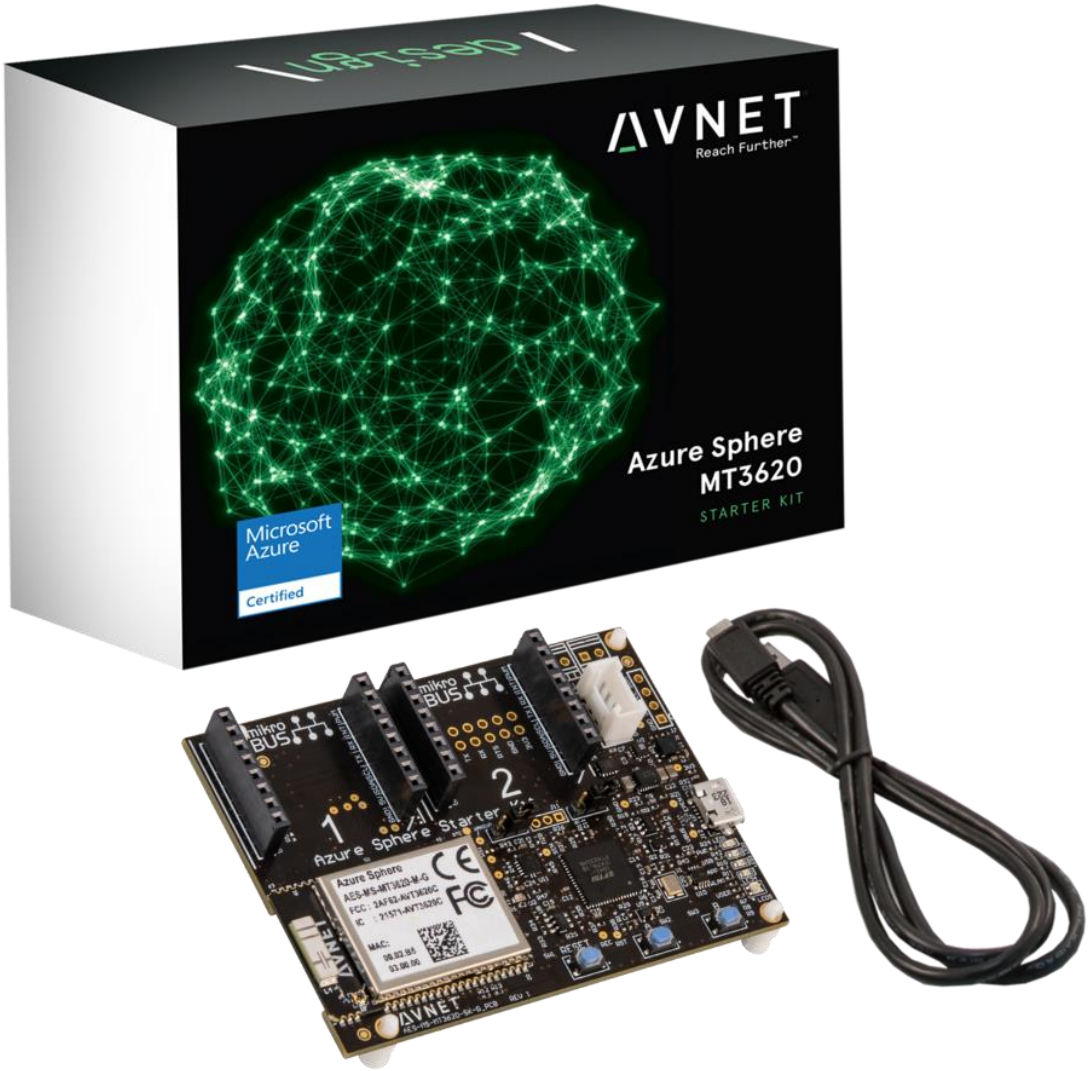

Azure Sphere MT3620 Starter Kit Hardware User Guide

v1.3 – April 29, 2019

1 Document Control

Document Version: v1.3

Document Date: 04/29/2019

Document Author: Peter Fenn

Document Classification: Public

Document Distribution: Public

2 Version History

Version	Date	Comment
1.0	03/31/2019	Initial draft release
1.1	04/02/2019	Click socket pinouts corrected (p19) Module pinout assignments on SK board corrected (p36)
1.2	04/26/2019	Public Release version, updated images and content corrections
1.3	04/29/2019	Updated block diagram and module pinout diagrams

Contents

Figures

3 Hardware Checklist

Hardware items recommended for application development are the following

#	Item Description
1	Development Computer with Windows-10 Operating System
2	Avnet Azure Sphere MT3620 Starter Kit and USB cable
3	USB current monitor dongle (optional)
4	MikroE Click "Tester" boards (optional)

4 Software Checklist

Listed below are the software items mentioned in this document

#	Item Description
1	**Visual Studio 2017** (Enterprise, Professional or Community edition, v15.7 or later) downloadable from: https://visualstudio.microsoft.com/
2	**Microsoft Azure Sphere SDK for Visual Studio Preview** (Windows console application) downloadable from: http://aka.ms/AzureSphereSDK Azure_Sphere_SDK_Preview_for_Visual_Studio.exe
3	iPerf3 Server Application (Windows console application) iperf-3.1.3-win64.zip
4	Module: iPerf3 Test application (production-signed) iperf3_ps.imagepackage
5	Module: GPIO Test application (production-signed) AvnetDevBoardTestApp_ps.imagepackage
6	Module: Azure IoT Hub, IoT Central Out-of-Box Reference Design application https://github.com/Avnet/AvnetAzureSphereStarterKitReferenceDesign

6 Introduction

The **Azure Sphere MT3620 Starter Kit** supports rapid prototyping using Avnet's certified Azure Sphere module, based on the Microsoft MT3620AN device. The board features multiple expansion interfaces, including two MikroE Click sockets plus an I2C Grove connector, to enable easy hardware customization with a wide range of sensors and interfaces via the addition of custom or off-the-shelf plug-in boards.

The MT3620 is the first Azure Sphere certified "microcontroller", a completely new class of connected SoC IoT device that features "end-to-end security". User applications can target it's 500 MHz ARM Cortex-A7 core as well as two general purpose 200 MHz ARM Cortex-M4F I/O subsystem cores designed to support real-time requirements. The on-chip peripherals (GPIO, UART, I2C, SPI, I2S, PWM and ADC) can be mapped to any of these three user-accessible cores.

Additional differentiators of the MT3620 device are the built-in Pluton security subsystem (with dedicated CM4F core) for secure boot and secure system operation, its dual-band 802.11 a/b/g/n Wi-Fi connectivity, as well as integration of on-chip PMU, RTC plus FLASH and SRAM memory. Wi-Fi based OTA firmware and user application updates (using strict certificate-based authentication) are hosted by Microsoft for the lifetime of the MT3620 device

The Cortex-A7 application processor runs Microsoft's Azure Sphere Secure OS. Custom user applications are developed in C using the Microsoft Visual Studio IDE, which includes debugging features such as single-step execution, breakpoints and watch-points (supported via dedicated Azure Sphere service UART)

Online authentication and firmware updates are supported for the MT3620 device lifetime.

To facilitate maximum utility of standalone application exercises, the Starter Kit integrates an on-board set of sensors (3D accelerometer, 3D Gyro, temperature sensor, ambient light sensor) plus support for optional low-cost, OLED 128x64 graphical display. Further system customization is facilitated via a wide range of (over 540) different Click boards as well as I2C Grove connected peripheral boards

The Starter Kit is fitted with Avnet's dual-band chip-antenna version Azure Sphere module (which is also footprint and function compatible with a higher specification U.FL Azure Sphere module,which features full TX and RX antenna diversity via two external dual-band antennas

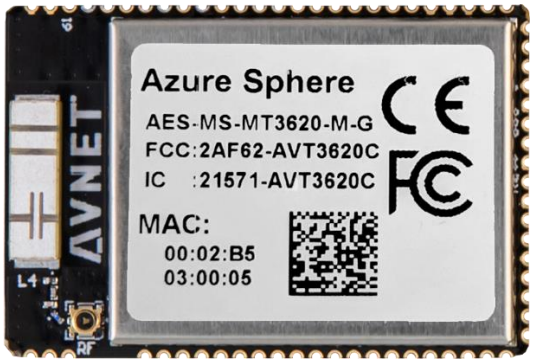

Figure 1 – Avnet Azure Sphere MT3620 Module (Chip Antenna version)

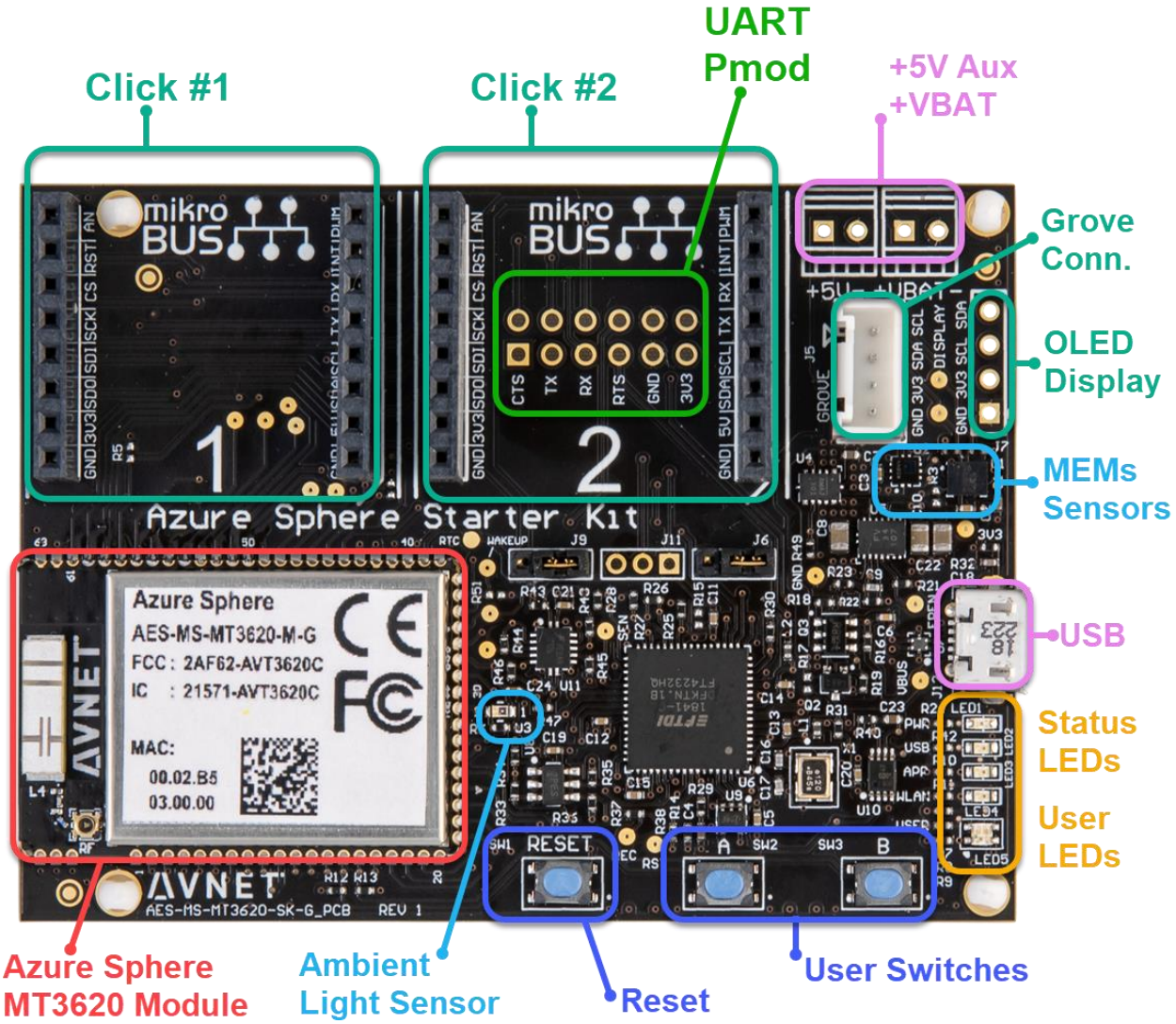

Figure 2 – Avnet Azure Sphere MT3620 Starter Kit

6.1 Azure Sphere MT3620 Starter Kit Info

- Part Number: AES-MS-MT3620-SK-G
- Kit URL: http://avnet.me/mt3620-kit

6.2 Items Included in the Starter Kit

- Azure Sphere MT3620 Starter Kit Board
- Azure Sphere MT3620 Starter Kit QuickStart Card
- USB cable (type-A to microUSB)
- Downloadable examples, reference designs and documentation

6.3 Important Reference Documents

- Azure Sphere MT3620 Starter Kit QuickStart Card
- Azure Sphere MT3620 Starter Kit Product Brief
- Azure Sphere MT3620 Starter Kit Hardware User Guide
- Azure Sphere MT3620 Starter Kit Schematic
- Azure Sphere MT3620 Starter Kit Bill of Materials
- Azure Sphere MT3620 Module Product Brief
- Azure Sphere MT3620 Module Datasheet & Integration Guide
- MediatTek MT3620 Product Brief Nov2018
- Microsoft Azure Sphere Installation Instructions
- Microsoft Azure Sphere Detailed Documentation

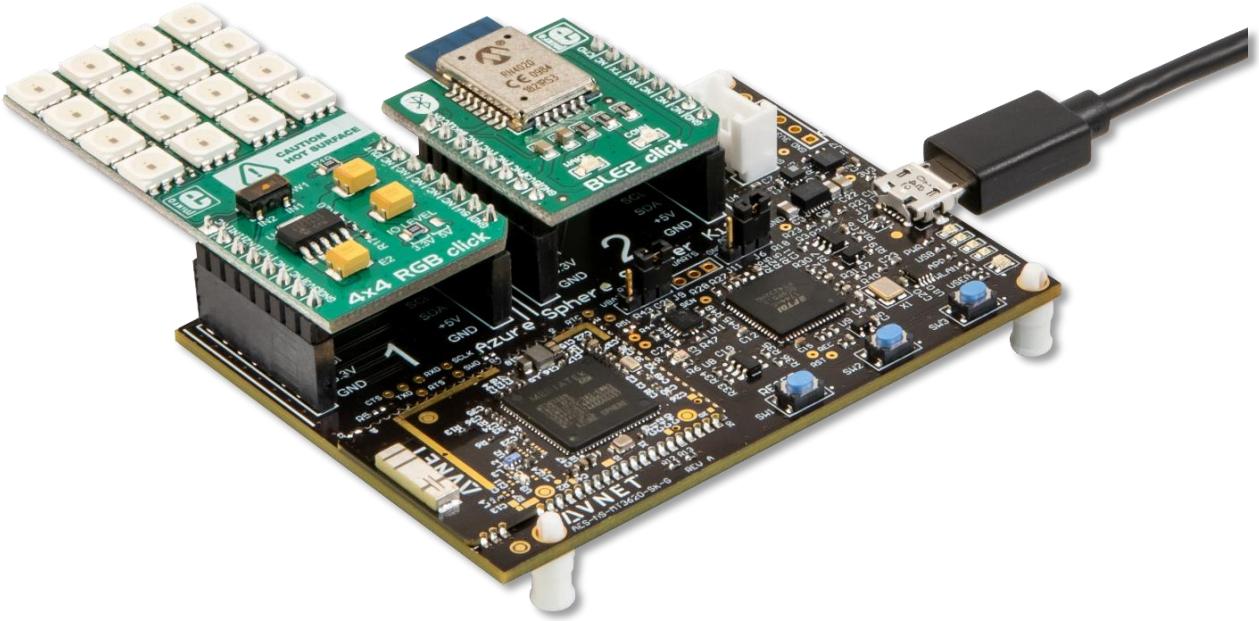

7 Starter Kit Architecture and Features

7.1 List of Features

Azure Sphere MT3620 Starter Kit

- Azure Sphere MT3620 module
    - Onboard Chip Antenna (for 2.4GHz and 5GHz Wi-Fi operation)
- USB to serial 4-port interface (FT4232HQ)
    - Debug, Service, Recovery and SWD interfaces
- Onboard sensors:
    - Ambient Light, 3-axis Accelerometer, 3-axis Gyro, Temperature, Barometric Pressure
- Multiple hardware expansion interfaces:
    - MikroE Click Board Expansion Sockets (two sockets. I2C,SPI,UART,ADC,etc interfaces)
    - UART/BLE connector (2x6 pin R/A connector, compatible with a subset of Pmod boards)
    - Grove expansion connector (I2C)
    - Interface for optional OLED 128x64 display (I2C)
    - Battery backup interface (2-pin VBAT compact terminal, not fitted)
    - +5V DC Aux interface (2-pin compact terminal, not fitted)
- Push-button switches (3) and Status LEDs (7)
- 5V to 3.3V DC power regulation (with over/under voltage protection) and power interfaces for:
    - USB 5V DC from host computer
    - AUX 5V DC (option to fit compact terminals)
    - VBAT (option to fit compact terminals)
    - ADC VREF external reference input (2-pin header)
- Operating Temperature: -30~85°C
- Dimensions: 75mm x 55mm
- Certification: FCC, IC, CE, MIC (pending), RoHS

Chip-Antenna Version Azure Sphere Module *(Included on Starter Kit)*

MT3620AN based module with the following features pinned-out:

- 1x 500MHz ARM Cortex A7, 4MB SRAM
- 2x 200MHz ARM Cortex M4F cores, 64KB SRAM
- OS: Azure Sphere Operating System for end-to-end security
- Programming & recovery Interface:
- 3x ISU interfaces, pre-configured for UART, SPI, I2C
  (max interface rates are: UART=3Mbps, SPI=40MHz, I2C=1MHz)
- ADC/GPIO: 3x 12bit ADC inputs (or can be used as GPIOs)
- PWM/GPIO: 9x PWM outputs, or can be used as GPIOs (for a total of up to 24 GPIOs)
- RTC : On-chip, requires VBAT supply
- Wi-Fi: Dual-band 2.4/5GHz 802.11 a/b/g/n
- Antenna: Single onboard dual-band 2.4/5GHz chip antenna (Pulse W3006)
- Operating Temperature: -30~85°C
- Dimensions: 33mm x 22mm x 3.68mm
- Certification: FCC, IC, CE, MIC (pending), RoHS

UFL Version Azure Sphere Module *(*** Not on Starter Kit, but differences listed below, are of the higher specification Azure Sphere module version that is also available for OEM end-products, with identical footprint and functionality)*

- MT3620AN features as listed above
- RF front-end: Facilitates RX and TX antenna diversity (added Diplexer and DPDT RF switch)
- Antennas: Two U.FL connectors for external 2.4/5GHz flex antennas
- Operating Temperature: Full -40C~85°C industrial rating (has 26 MHz TCXO)

7.2 Block Diagram - Avnet Azure Sphere MT3620 Starter Kit

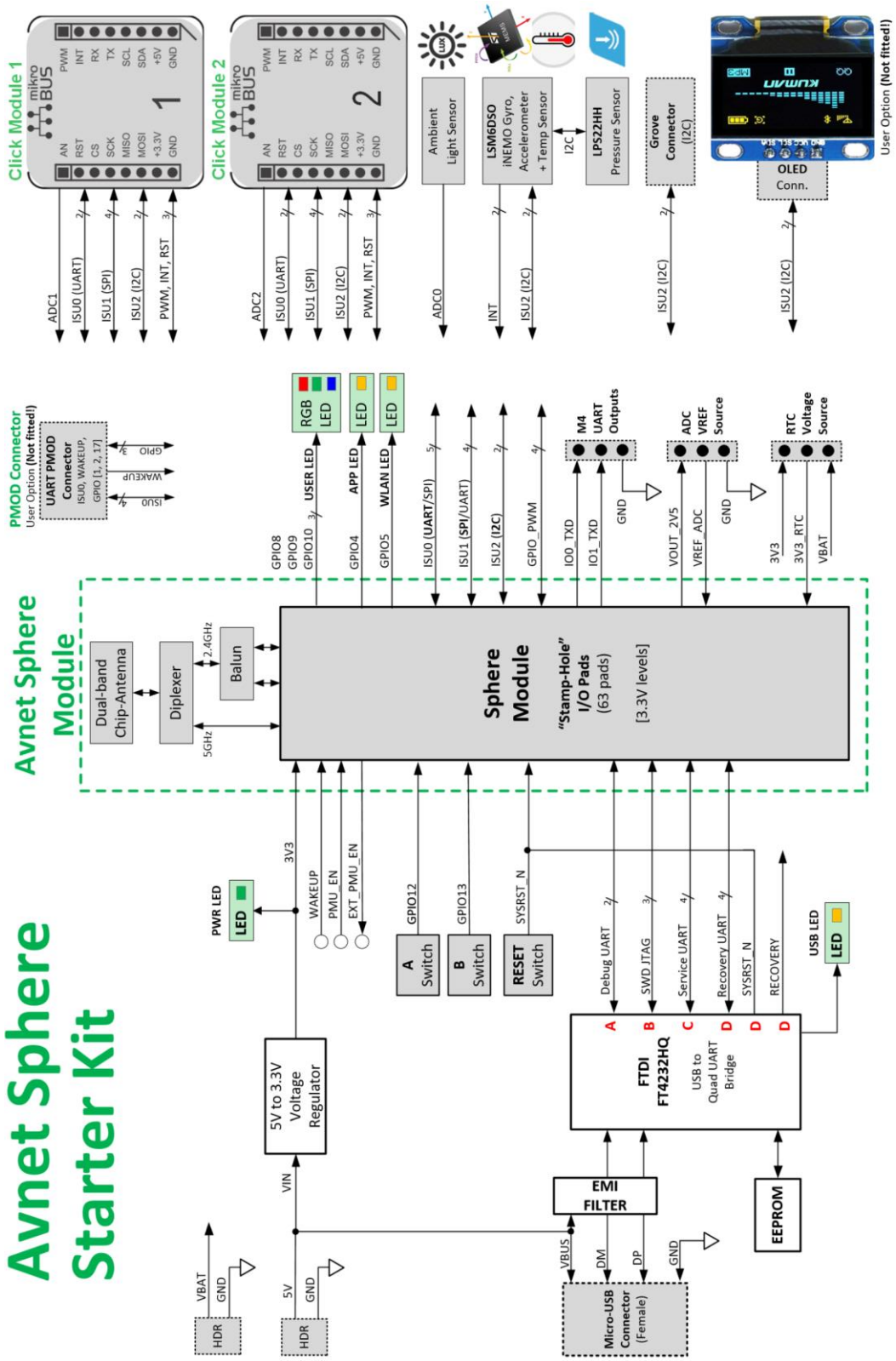

7.3 Block Diagram - Azure Sphere MT3620 Module

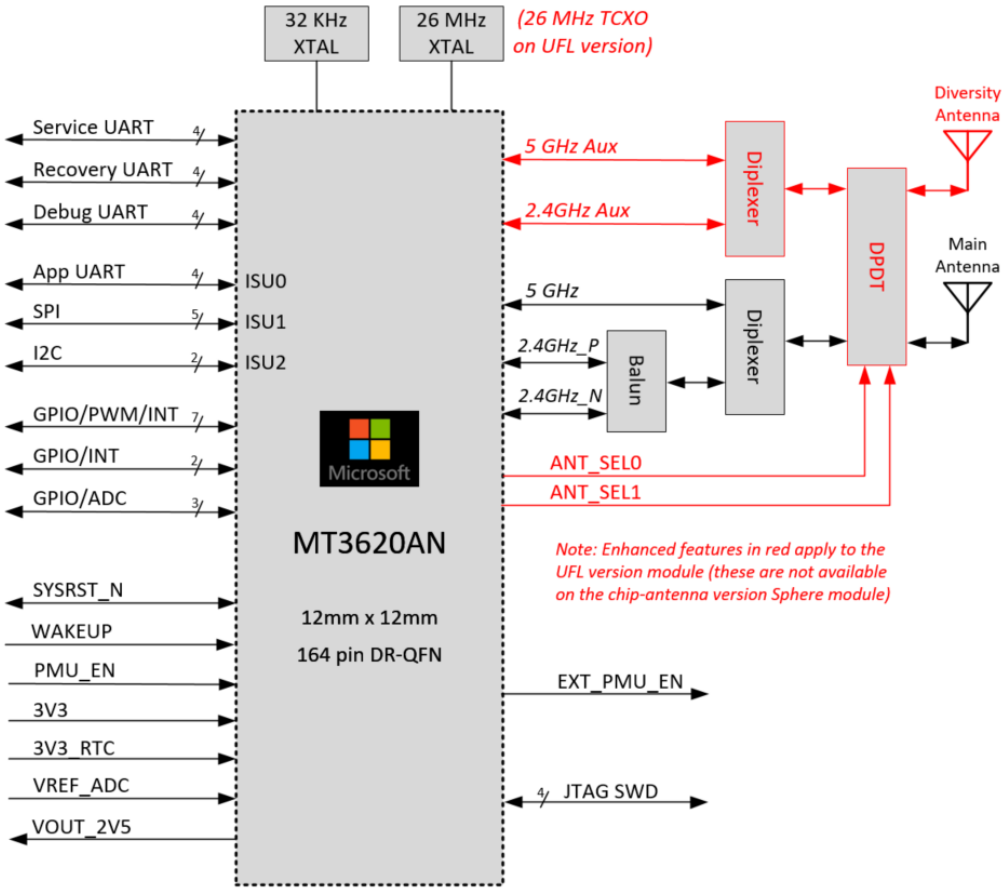

7.4 Hardware Expansion Options

Beyond the readily accessible onboard sensors (**Ambient Light, 3D Accelerometer, 3D Gyro, Temperature, Barometric Pressure**), a key differentiating feature of this Azure Sphere Starter Kit is the availability of multiple hardware expansion interfaces:

- MikroE Click Board expansion sockets (two sockets, I2C,SPI,UART,ADC,etc interfaces)
- UART/BLE connector (2x6 pin r/a connector compatible with some Pmod boards, not fitted)
- Grove Expansion Connector (I2C)
- OLED Interface for optional 128x64 display (I2C, not fitted)
- VBAT battery connector (option not fitted)
- AUX 5V DC (option not fitted)
- ADC VREF external reference input

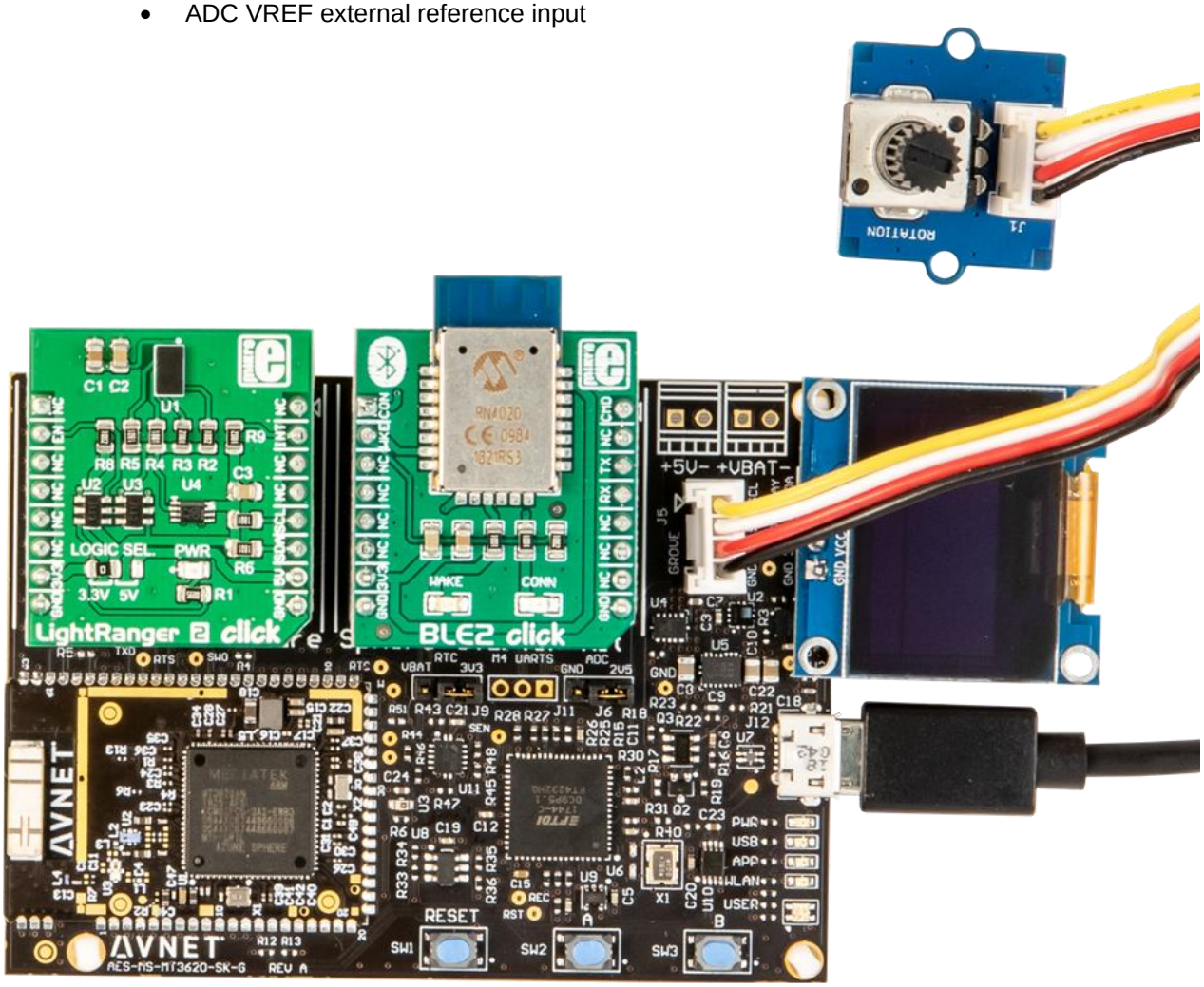

Figure 3 – Starter Kit Fitted with Click, Grove and OLED Expansion Boards

8 Hardware Functional Description

8.1 Avnet Azure Sphere MT3620 module

The module pins-out a subset of the MT3620 SoC device functionality, via 66 castellated “stamp-hole” pads along three edges of it’s compact 33mm x 22mm form-factor.

Refer to the following documents for detailed information on Avnet’s certified Azure Sphere MT3620 module as well as the Mediatek MT3620 Azure Sphere SoC device that this is based on

- Azure Sphere MT3620 Module Product Brief
- Azure Sphere MT3620 Module Datasheet & Integration Guide
- Media Tek MT3620 Product Brief Nov2018

8.2 USB to Serial 4-port Host Interface (FT4232HQ)

A significant part of this Starter Kit is the implementation of the Microsoft-specified 4-port USB to Serial bridge implementation for the RECOVERY, SERVICE, DEBUG and SWD interfaces.

A simplified block diagram of this 4-port USB to Serial bridge circuit is shown below:

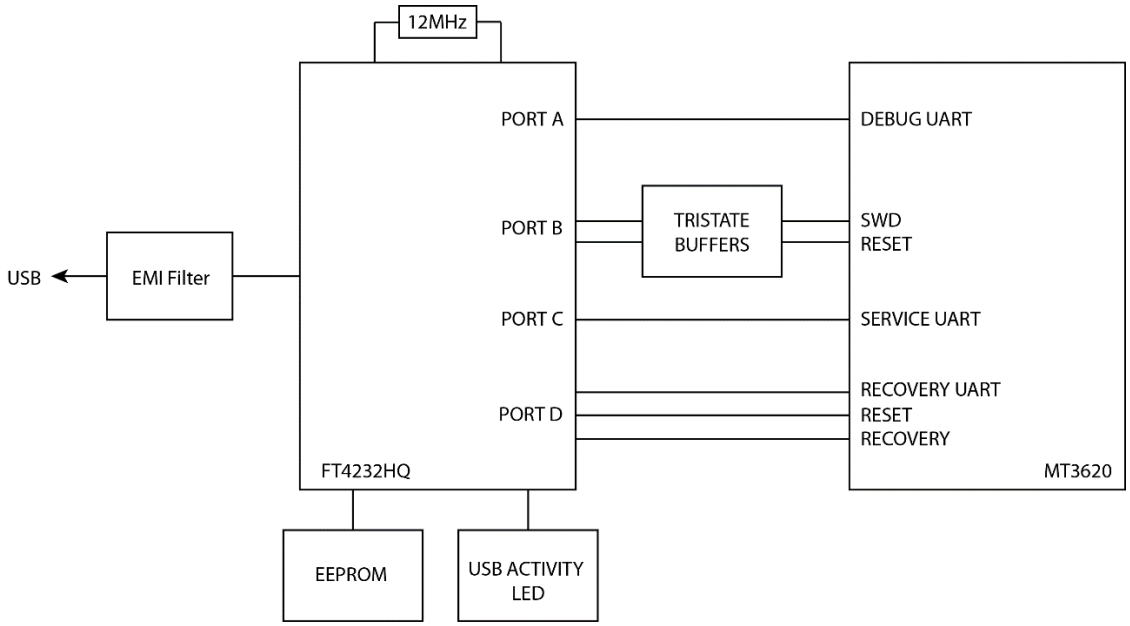

See **section 9.4** of this document (Windows FTDI USB Driver Installation and Verification) for in-depth detail on driver installation and the use of these four interfaces

8.3 Configuration Jumpers, Status LEDs and Switches

8.3.1 Setting the H/W Configuration Jumpers

The following two 3-pin jumpers are factory-configured as tabled below
Note: The board will not boot-up if **J9** (RTC_PWR) is configured for an invalid power source!

#	MT3620 Pin Name	Jumper Position	Setting Description
J6	**ADC_VREF**	Bridge pins **1-2**	ADC range = 2V5 from MT3620
J9	**RTC_PWR**	Bridge pins **1-2**	RTC_PWR = 3V3 from supply rail

8.3.2 Push Button Switches

Three pushbuttons are located on the lower edge of the Starter Kit

Notes:

- RESET is located nearest the Sphere module
- Button A and Button B functions are software-defined (defined by the User application)

Tabled here are the MT3620 GPIO assignments for the push button switches

Button Switch	MT3620 GPIO	MT3620 Pin	MT3620 Function
USER-A	GPIO12	27	INT-capable GPIO
USER-B	GPIO13	28	INT-capable GPIO
RESET	SYSRST_N	125	System Reset, active low

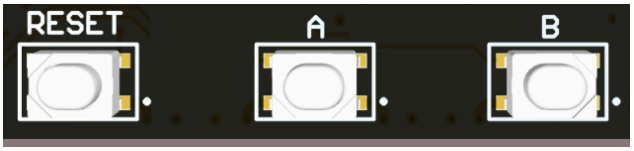

Figure 4 – RESET and USER Push Button Switches

8.3.3 Status / Indicator LEDs

All LEDs are located along the board-edge between the USB connector and Button-B

Notes:

- LED3, LED4 and LED5 (RGB LED) functions are defined by the User application software
- LED3 and LED4 preferred functions are shown
- LED3, LED4 and LED5 (RGB LED) intensity can be varied via MT3620 PWM settings

Tabled here are the MT3620 GPIO assignments for the LEDs

Status LEDs	Color	Ref. Des.	MT3620 GPIO	MT3620 Pin	MT3620 Function
PWR 3V3 Status	Green	LED1	-	-	-
USB Activity	Yellow	LED2	-	-	-
APP. Status	Yellow	LED3	GPIO4	17	GPIO / PWM
WLAN Status	Yellow	LED4	GPIO5	18	GPIO / PWM
USER RGB LED	Red	LED5	GPIO8	21	GPIO / PWM
	Green	LED5	GPIO9	22	GPIO / PWM
	Blue	LED5	GPIO10	25	GPIO / PWM

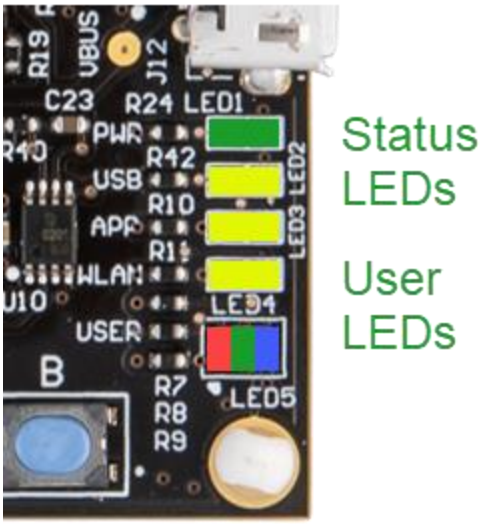

Figure 5 – Location of the Status / Indicator LEDs

8.4 Onboard sensors

8.4.1 3D Accelerometer, 3D Gyro and Temperature (LSM6DSO)

The combo **LSM6DSO** iNemo device (from ST MicroElectronics) provides these three sensor functions. Measurements are accessed via the I2C bus

8.4.2 Barometric Pressure (LPS22HH)

The **LPS22HH** device (from ST MicroElectronics) provides digital pressure output. Measurements are accessed via the LSM6DSO interface to the I2C bus.

The LSM6DSO acts as a sensor hub and is the I2C master on the secondary I2C bus to which the LPS22HH pressure sensor device is attached.

8.4.3 Ambient Light Sensor (ALS-PT19)

The **ALS-PT19-315C/L177/TR8** (from Everlight) ambient light sensor provides analog-output light sensing. This sensor (**U3**) is located towards lower edge of the PCB, between the Sphere module and the large FTDI device

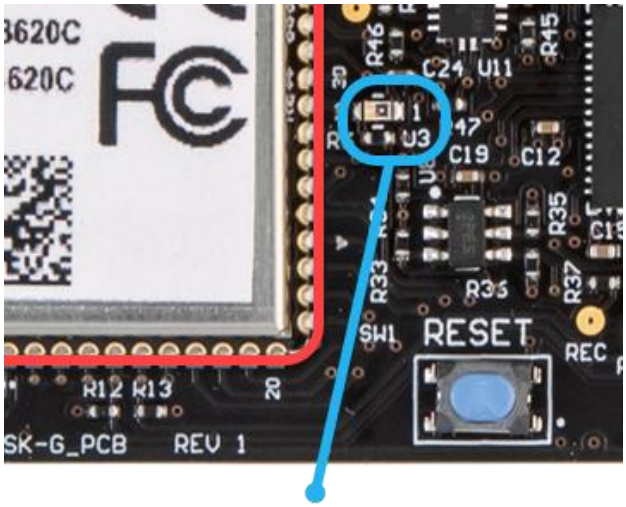

Figure 6 – Location of Ambient Light Sensor (U3)

Notes:

- **U3** analog output is connected directly to **ADC0** input of the MT3620
- Power to this light sensor is from the **VOUT_2V5** output of the MT3620
- The ADC function is not yet supported in Azure Sphere OS 19.02

8.5 Peripheral Expansion Interfaces

8.5.1 MikroE Click Sockets

Two Mikrobus Click sockets are available on the Sphere Starter Kit. Functionality of the Starter Kit hardware can be customised by choosing from **over 600** different Click Boards now listed in MikroE's user-friendly parametric search tool at https://www.mikroe.com/click

Purchase of Click boards from Avnet is assisted by entering applicable MikroE part# in the searchbox at the following page: https://www.avnet.com/shop/us/m/mikroelektronika/

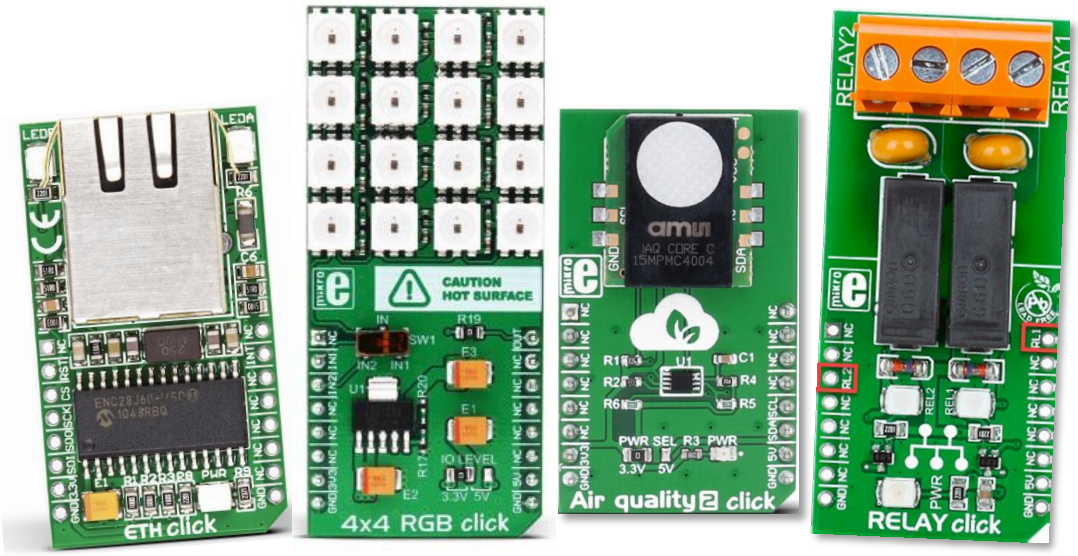

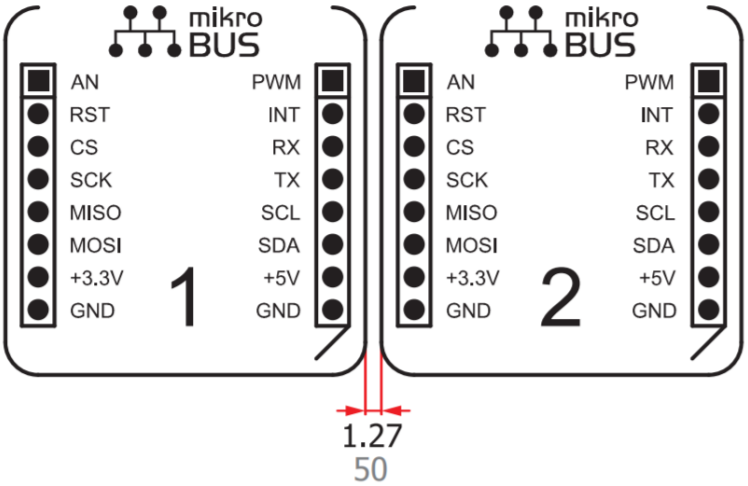

Notes:

- The UART, I2C and SPI allocated ISU interfaces are common to both Click sockets
- The INT signal is common to both Click sockets (GPIO_PWM2)
- The CS pin of the SPI interface is different on each Click socket (CSA and CSB)
- The AN, RST, CS and PWM signals are different on the two Click sockets
- All signalling on the Click sockets is at 3.3V levels

Tabled below is a listing of the MT3620 pinout to the two Click sockets:

Click Socket #1

Click1 Pin	Module Signal Name	Click1 Pin	Module Signal Name
AN	GPIO42_**ADC1**	**PWM**	GPIO0_PWM0
RST	GPIO16	**INT**	GPIO2_PWM2
CS	GPIO34_**CSA1**_CTS1	**RX**	GPIO28_MISO0_**RXD0**_SDA0
SCK	GPIO31_**SCLK1**_TX1	**TX**	GPIO26_SCLK0_**TXD0**
MISO	GPIO33_**MISO1**_RX1_DATA1	**SCL**	GPIO37_MOSI2_RTS2_**SCL2**
MOSI	GPIO32_**MOSI1**_RTS1_CLK1	**SDA**	GPIO38_MISO2_RXD2_**SDA2**
+3.3V	3V3	**+5V**	5V
GND	GND	**GND**	GND

Click Socket #2

Click2 Pin	Module Signal Name	Click2 Pin	Module Signal Name
AN	GPIO43_**ADC2**	**PWM**	GPIO1_PWM1
RST	GPIO17	**INT**	GPIO2_PWM2
CS	GPIO35_**CSB0**	**RX**	GPIO28_MISO0_**RXD0**_SDA0
SCK	GPIO31_**SCLK1**_TX1	**TX**	GPIO26_SCLK0_**TXD0**
MISO	GPIO33_**MISO1**_RX1_DATA1	**SCL**	GPIO37_MOSI2_RTS2_**SCL2**
MOSI	GPIO32_**MOSI1**_RTS1_CLK1	**SDA**	GPIO38_MISO2_RXD2_**SDA2**
+3.3V	3V3	**+5V**	5V
GND	GND	**GND**	GND

8.5.2 UART/BLE Connector

An unpopulated 2x6 connector site is located under Click Socket #2. The pinout of this footprint was designed to accommodate a 2x6 right-angle female socket, compatible with a subset of PMOD peripheral boards available from Digilent,

Notes:

- The four UART pins and GPIO2 are shared with both Click sockets
- GPIO1 and GPIO17 are shared only with Click socket #2
- The WAKEUP input pin allows an external device to wake-up the MT3620 SoC
- All signalling on this socket is at 3.3V levels

Tabled below is a listing of the MT3620 pinout to this 2x6 socket:

Pmod Pin #	Signal Name	Pmod Pin #	Signal Name
1	GPIO29_CSA0_**CTS0**	**7**	GPIO2_PWM2
2	GPIO26_SCLK0_**TXD0**	**8**	GPIO17
3	GPIO28_MISO0_**RXD0**_SDA0	**9**	GPIO1_PWM1
4	GPIO27_MOSI0_**RTS0**_CLK0	**10**	WAKEUP
5	GND	**11**	GND
6	3V3	**12**	3V3

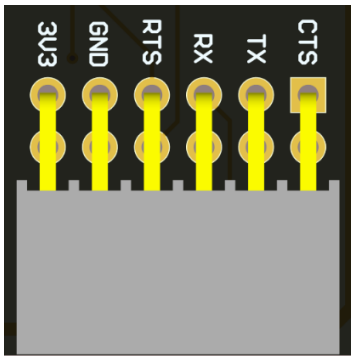

Figure 7 – UART/BLE Female Right-Angle 2x6 Connector

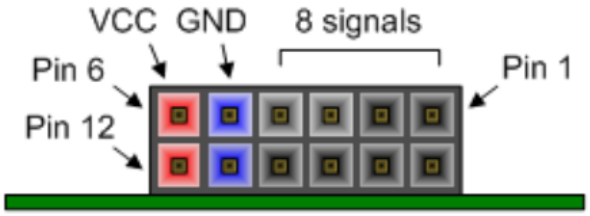

Figure 8 – UART/BLE Female Connector (viewed from board edge)

8.5.3 GROVE Connector

A GROVE connector is provided to facilitate system expansion using GROVE modules (sensors, actuators, etc.) - Go here for a listing of available functions

Notes:

- Only I2C and GPIO GROVE modules are supported
- The I2C interface is shared with the LSM6DSO sensor, Click sockets and OLED display (attention must be paid to the capacitive loading and clock-rate used on this I2C bus)

The pinout of the GROVE connector is tabled below:

GROVE Pin #	Signal Name	Signal Name
1	**SCL**	GPIO37_MOSI2_RTS2_**SCL2**
2	**SDA**	GPIO38_MISO2_RXD2_**SDA2**
3	**3V3**	3V3
4	**GND**	GND

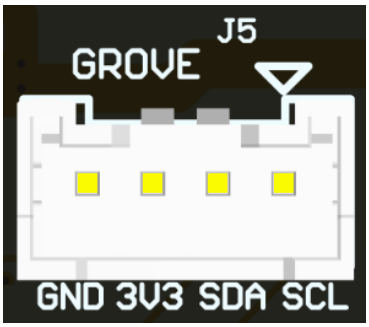

Figure 9 – GROVE Connector (viewed from board edge)

8.5.4 OLED Display Interface

Low-cost (under $10) 0.96” OLED 128x64 displays (I2C) are available from multiple sources https://www.amazon.com/s?k=OLED+128+x+64+display

Caution!

- The pinout numbering (and sequence of the I2C pins) for the 4-pin DISPLAY connector (J7) is different from that of 4-pin GROVE connector (J5)

- Make sure to select an OLED display with **GND and VCC in the order shown below** !!! (Some low-cost OLED displays reverse the sequence of the GND and VCC pins!)

- Two example OLED displays (based on SSD1306 display driver) with GND and VCC in the correct sequence are shown below:

Roll over image to zoom in

by UCTRONICS

UCTRONICS 0.96 Inch OLED Module 12864 128x64 Yellow Blue SSD1306 Driver I2C Serial Self-Luminous Display Board for Arduino Raspberry PI

21 customer reviews | 9 answered questions

Price: $6.99 prime

New (2) from $6.99 prime

Specifications for this item

Brand Name	UCTRONICS
Item Weight	0.012 ounces
Model Number	U602602
Part Number	U602602
Size	IIC/I2C Interface

MakerFocus 2pcs I2C OLED Display Module 0.91 Inch I2C SSD1306 OLED Display Module Blue I2C OLED Screen Driver DC 3.3V~5V for Arduino

by MakerFocus

67 customer reviews | 25 answered questions

Amazon's Choice for "arduino oled"

Price: $10.99 prime

Color: **0.91 Inch Blue**

The pinout of the OLED DISPLAY connector on this Starter Kit is tabled below:

GROVE Pin #	Signal Name	Signal Name
1	**GND**	GND
2	**3V3**	3V3
3	**SCL**	GPIO37_MOSI2_RTS2_**SCL2**
4	**SDA**	GPIO38_MISO2_RXD2_**SDA2**

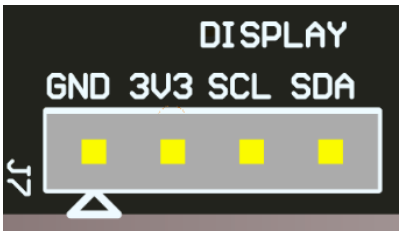

Figure 10 – OLED Display Connector (viewed from board edge)

8.6 Power Interfaces, Regulation and Protection

8.6.1 USB Host PC Interface

The MicroUSB connector interface provides the following functions:

a) Combo serial over USB communication for the:
RECOVERY, SERVICE, DEBUG and SWD interfaces.

b) +5V power from the host PC (or powered USB hub) to the Starter Kit

8.6.2 AUX 5V DC and VBAT Terminal Connectors

Connection points are provided via unpopulated footprints for two mini-terminal blocks located in top right corner of the board, for the following two external power sources, :

a) **AUX 5V DC** input (nominal 5.0V, max 6.0V)

b) **VBAT DC** input (min 2.50 V, max 3.63V). This is the RTC battery-backup voltage

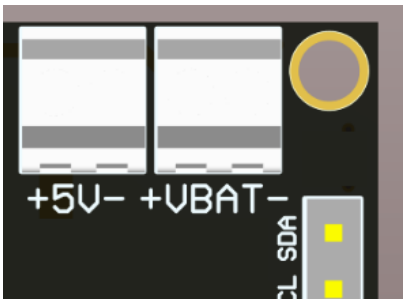

8.6.3 ADC VREF Header (J6)

The voltage reference input (J6 pin 2) for the 12bit A/D Convertor on the MT3620 device, must be powered. This reference voltage can be from one of two sources:

a) **VOUT_2V5**, the 2.5V LDO output from the MT3620 (**bridge J6 pins 1 and 2**), or

b) External Vref (min 1.8V, max 2.5V), applied directly to **J6 pin 2** (remove shorting link!)

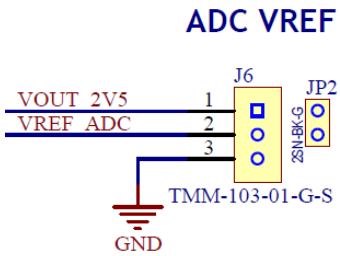

8.6.4 Power Protection

An “Ideal Diode” circuit protects the USB **VBUS 5V DC** source from the **AUX 5V DC** input

An active “Over/Under Voltage Protection” circuit provides input voltage protection to the DC/DC regulator (MP5018GD input voltage max = 6.0V)

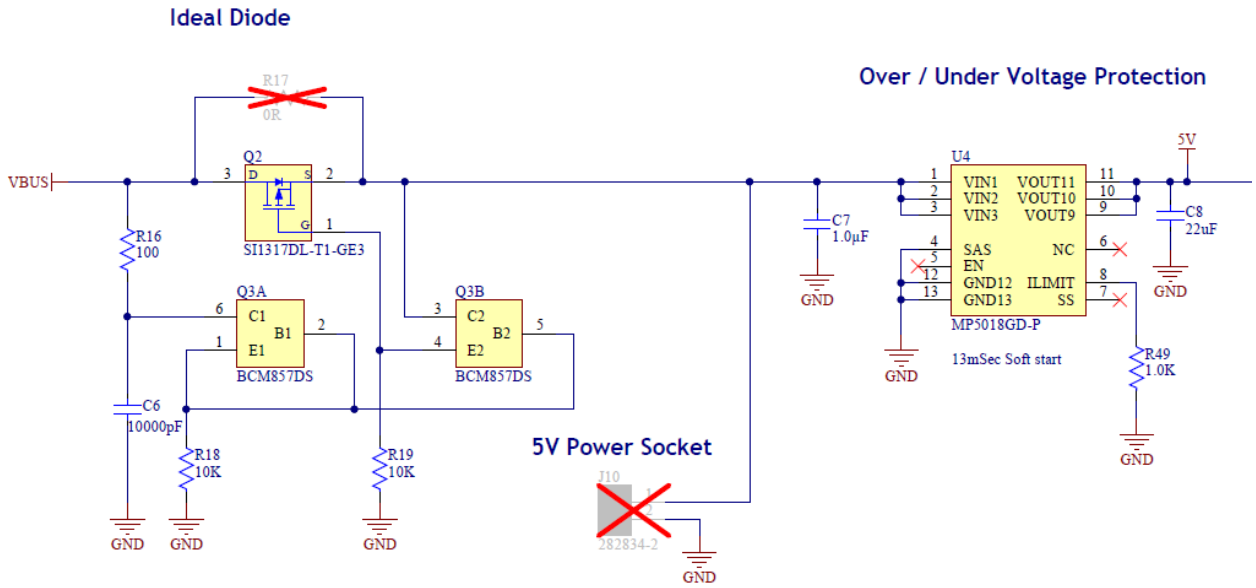

8.6.5 Power: 3.3V Regulation

A 5V to 3.3V buck convertor (rated for **2A max**) regulates the VCC rail voltage

EXT_PMU_EN is strapped via a weak pull-up (and is also routed to a test-point “**EPEN**”)

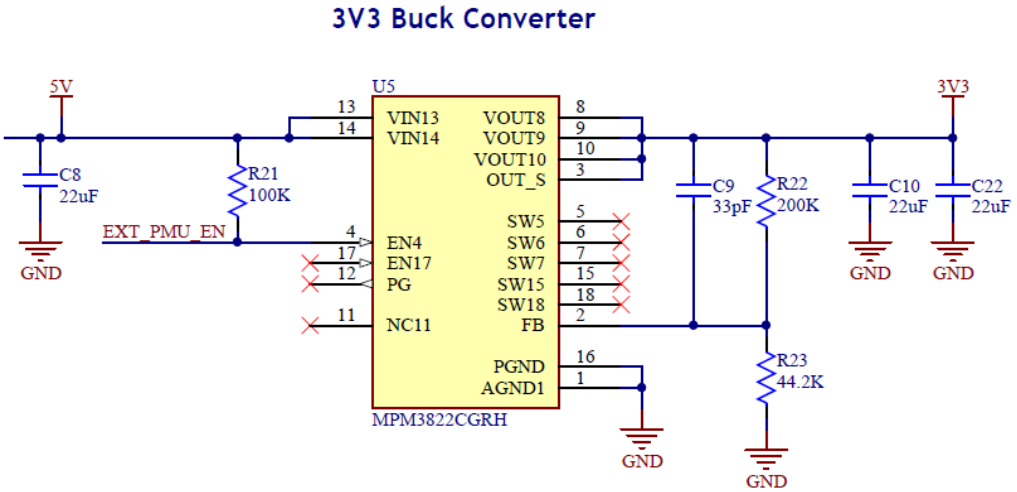

8.6.6 Power LED and Testpoints

The Starter Kit is powered by connecting one of two possible power sources:

a) +5V via the provided USB cable, connected to the development computer

b) +5V via the AUX 5V DC two-pin terminal block (this option not fitted), connected to an external +5V DC power adaptor, rated to deliver at least 1.5 A

#	Description	Desired Results / Comment
LED1	**3V3 Power LED**	LED1 illuminates Green when board is powered
3V3	**3V3 Test Points**	Easiest probe access to 3.3V and GND is at the: • DISPLAY connector • GROVE Connector • UART/BLE Connector

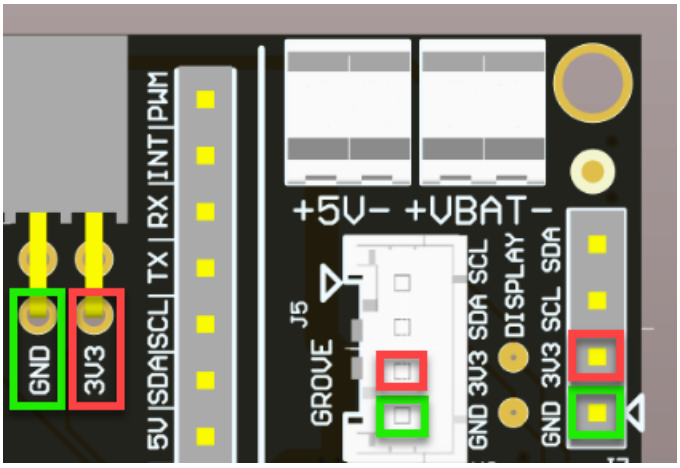

Figure 11 – Recommended 3V3 and GND Test Points

8.6.7 Measuring Power Consumption

It is suggested that a current-measurement USB "dongle" be used in-line with the USB connection to the host computer for monitoring the current drawn (at 5V)

Figure 12 – Current-measurement USB dongle

9 Software Development Environment Preparation

9.1 Microsoft Installation Instructions

Detailed guidance is provided at: https://docs.microsoft.com/en-us/azure-sphere/install/install

9.2 Verify Windows 10 Version

1) Before commencing software installation, verify the version of Windows 10 Operating System meets requirements. In the Windows search box (**Windows key + R**), enter **winver** to check…

2) The version reported must be **1607** or later…
https://en.wikipedia.org/wiki/Windows_10_version_history

9.3 Install Azure Sphere SDK

1) Download and unzip the latest Microsoft Azure Sphere SDK from:
http://aka.ms/AzureSphereSDK

2) Install this SDK on a Windows 10 computer, using the instructions located at:
http://avnet.me/ms_sphere_docs

3) Once installed, launch the application and at the Azsphere command prompt, enter this command to confirm the Sphere SDK version:
`azsphere show-version`
The version reported should be **19.02** or later
(Note: Connection to Sphere Starter Kit hardware is *not* required for this test)

9.4 Windows FTDI USB Drivers

9.4.1 Windows FTDI USB Driver Installation

1) Plug-in the provided USB cable from the Azure Sphere Starter Kit, to the Windows 10 development computer

2) On first-time connection of a Starter Kit, the USB drivers should automatically download and install (this can be slow). If drivers do not install automatically, right-click on the device name in Windows Device Manager and select **Update driver**. Alternatively, download the drivers from Future Technology Devices International (FTDI), - choose the driver that matches your Windows 10 installation (32- or 64-bit). Additional assistance on this aspect is available at: https://docs.microsoft.com/en-us/azure-sphere/install/install#connect-the-board

9.4.2 Windows to FTDI Interfaces Verification

3) Open Windows Device Manager and confirm the following are listed:
   - three new **COM ports** (under Ports COM & LPT)
   - a **TAP-Windows Adaptor V9** (under Network Adaptors)

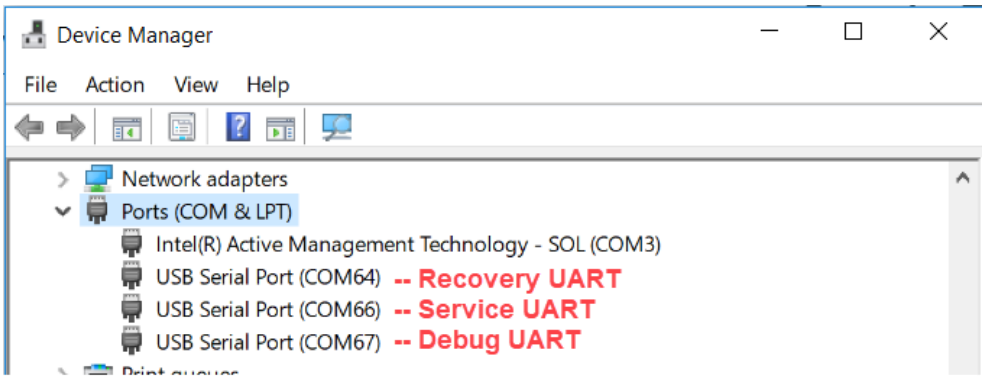

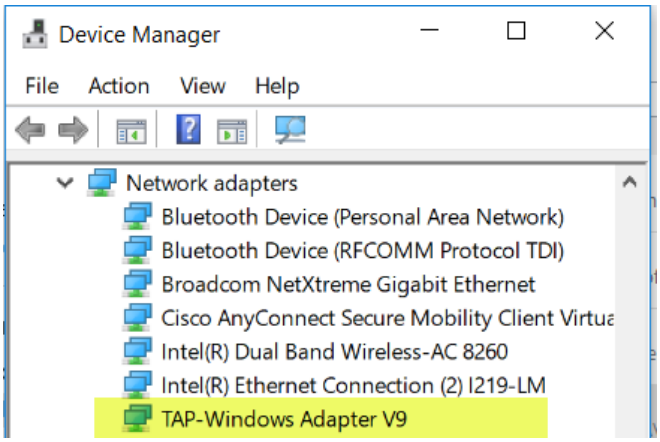

4) The steps on this page are **only required** if the FTDI **SERVICE interface fails** during first-time connection to the Azure Sphere Starter Kit

5) Open Windows network adapter settings
ie. Windows search box (**Windows key + R**) then enter **ncpa.cpl**

6) Right-click on **Azure Sphere** TAP-Windows Adapter V9.
Check it's properties are as shown below:

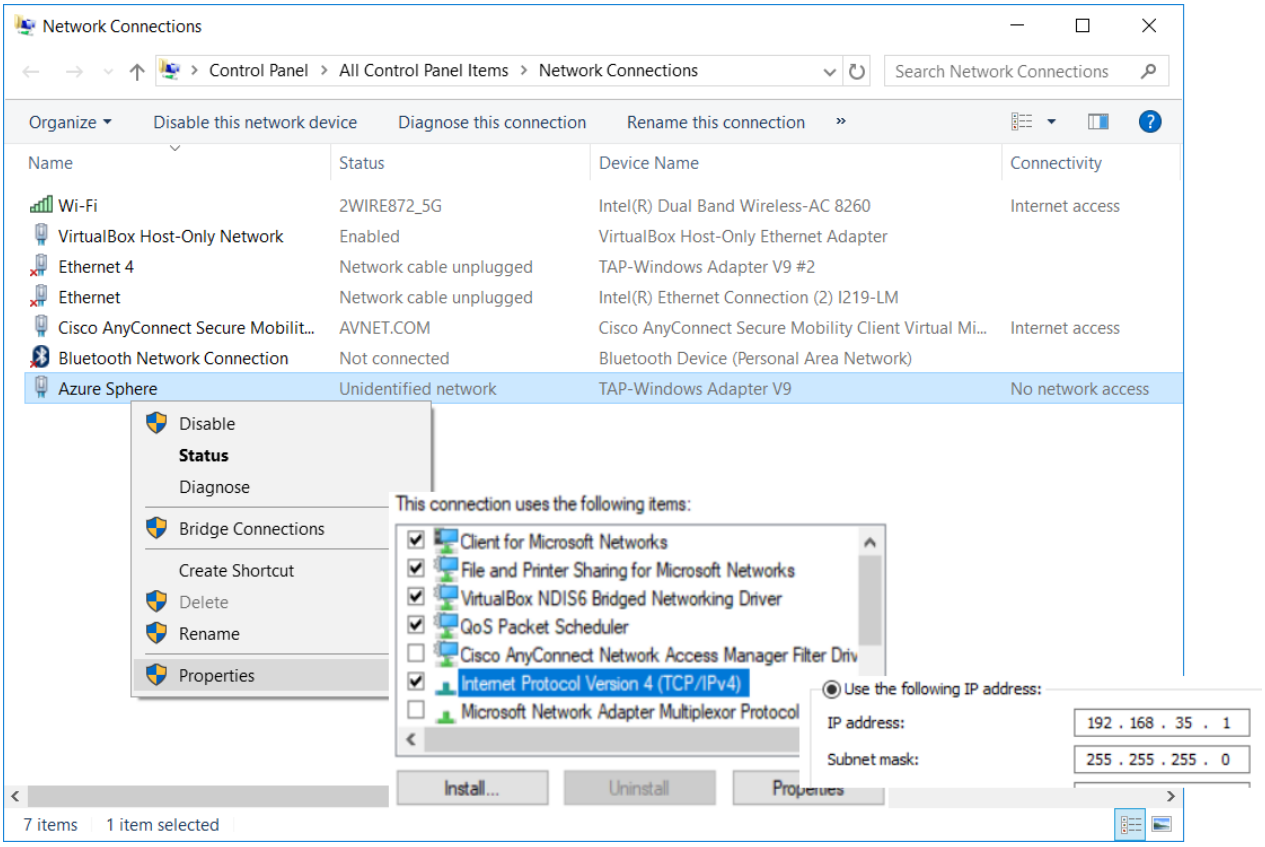

9.5 DEBUG Interface

1) The DEBUG UART is typically the highest numbered COM port (of the three new COM ports) reported by Windows Device Manager, for the Starter Kit's FTDI USB interface

2) To view the output of this serial port, open Tera Term (or other serial console application) and configure it for the noted COM number, with UART set for 115200 8N1 communication rate

3) Connect the Tera Term terminal then press the **RESET button** on the Starter Kit. Startup debug text similar to the following should appear on the terminal screen

4) Note! Terminal connection to the Debug Interface must be closed before attempting to use the RECOVERY interface!

9.6 SERVICE interface

1) Open the Azure Sphere Developer Command-Line tool… (Sphere CLI)

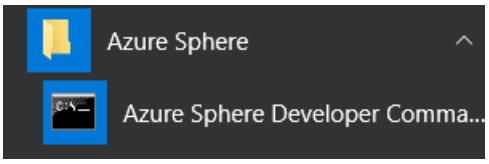

2) Plug-in the USB cable from Starter Kit to the PC, then enter the following *Sphere CLI* command:

```
azsphere device show-attached
```

3) The board will report it's unique Azure Sphere Device ID…

```
C:\TEST>azsphere device show-attached
Device ID: DCED354379F883891026A30CC2C38F09928021FED3EC3428
9215331CF886F9FE642
Command completed successfully in 00:00:01.3812178.
```

9.7 RECOVERY Interface

This interface is for reloading/updating the Azure Sphere OS via a wired UART interface (typically for factory reprogramming of the MT3620 device) and will not be required by most developers.

Once an Azure Sphere Starter Kit is connected to the internet, Sphere OS updates are initiated automatically (or on demand) via the Over-The-Air (OTA) Wi-Fi interface

Notes:

a) The Sphere OS installed on the Azure Sphere module should be version 19.02 (or later)
   - Verify this by entering the following command at the SDK prompt:

```
azsphere device show-ota-status
```

```
C:\TEST>azsphere device show-ota-status
Your device is running Azure Sphere OS version 19.03.
The Azure Sphere Security Service is targeting this device with Azure Sphere OS version 19.03
Your device has the expected version of the Azure Sphere OS: 19.03
```

b) Should manual recovery of the OS need to be done from local files rather than via Wi-Fi, the following command is used:

```
azsphere device recover --images <path to OS Recovery Images>
```

c) This takes approximately **2 min 43 seconds**. All contents of flash memory (Sphere OS, application software, Wi-Fi credentials and other config data) are erased during RECOVERY

10 Wi-Fi Connectivity

10.1 Scan for Wi-Fi Access Points

A quick-check of Wi-Fi reception can be done by entering the following *Sphere CLI* command:

```
azsphere device wifi scan
```

After 10 seconds or so, a scan report displays detected SSIDs, signal-levels, etc in the format shown below:

```
Scan results:

SSID                : 2WIRE872_5G
Security state      : psk
BSSID               : 2c:56:dc:d6:fc:84
Signal level        : -46
Frequency           : 5180

SSID                : 2WIRE872
Security state      : psk
BSSID               : 2c:56:dc:d6:fc:80
Signal level        : -27
Frequency           : 2457
...
```

10.2 Configuring the Wi-Fi Network Settings

Use the following command to configure the Wi-Fi settings
(replace **??????** with the applicable credentials)

```
azsphere device wifi add --ssid ?????? --key ???????
```

or abbreviated to:

```
azsphere device wifi add -s ?????? -k ???????
```

Verify the present Wi-Fi connectivity status by entering:

```
azsphere device wifi show-status
```

Other useful Wi-Fi commands are:

```
azsphere device wifi list
```

```
azsphere device wifi enable
```

```
azsphere device wifi disable
```

```
azsphere device wifi delete
```

Note: Appendix-B in this document includes instructions for running a pre-compiled copy of the iPerf3 test application, to check Wi-Fi bit-rate performance with the currently selected Wi-Fi Access Point

11 Contact Info and Technical Support

Documentation and reference designs are available for download from the product page:
http://avnet.me/mt3620-kit

Links to instructional blogs are available at:
http://avnet.me/mt3620-kit

For further info on Avnet-designed Starter Kits, contact your local Avnet representative at:

Region	Organization	Email	Address & Phone
North America	Avnet Americas	eval.kits@avnet.com	AVNET - Americas 2211 South 47th Street Phoenix, AZ 85034, USA Phone: +1-800-585-1602
Europe	Avnet Silica	Microsoft@silica.com	Avnet Silica Gruber Str. 60c 85586 Poing, Germany Phone: +49-8121-77702

12 Disclaimer

The Azure Sphere MT3620 Starter Kit is a development board designed to facilitate product evaluation and system-level prototyping.

This board is not intended for use as part of an end-product without additional steps being performed to ensure regional certification compliance.

Avnet assumes no liability for modifications that a user chooses to make to this Starter Kit.

13 Safety Warnings

Safety Warnings

1) It is recommended that this product only be powered from one of the power sources listed below:

   a) +5V via the provided USB cable, connected to the development computer

   b) +5V via the AUX 5V DC two-pin terminal block (this option is not fitted), connected to an external +5V DC power adaptor, rated to deliver at least 1.5 A (this option is recommended when multiple expansion boards are attached). The external power supply shall comply with relevant regulations and standards applicable in the country of intended use.

2) Only compatible plug-in modules shall be connected to the Azure Sphere MT3620 Starter Kit. Connection of incompatible devices may affect compliance or result in damage to the unit and void the warranty.

3) This product must be operated in a well-ventilated environment.
   If an enclosure is used, this must provide adequate ventilation.

4) Do not insert or remove any expansion board (Click board, GROVE board or OLED Display), without first unplugging the relevant +5V DC power source

5) Ambient operating temperature when using this Starter Kit shall not exceed the range of:
   -30C to +85C

14 Appendix-A: Azure Sphere Module Pinout Detail

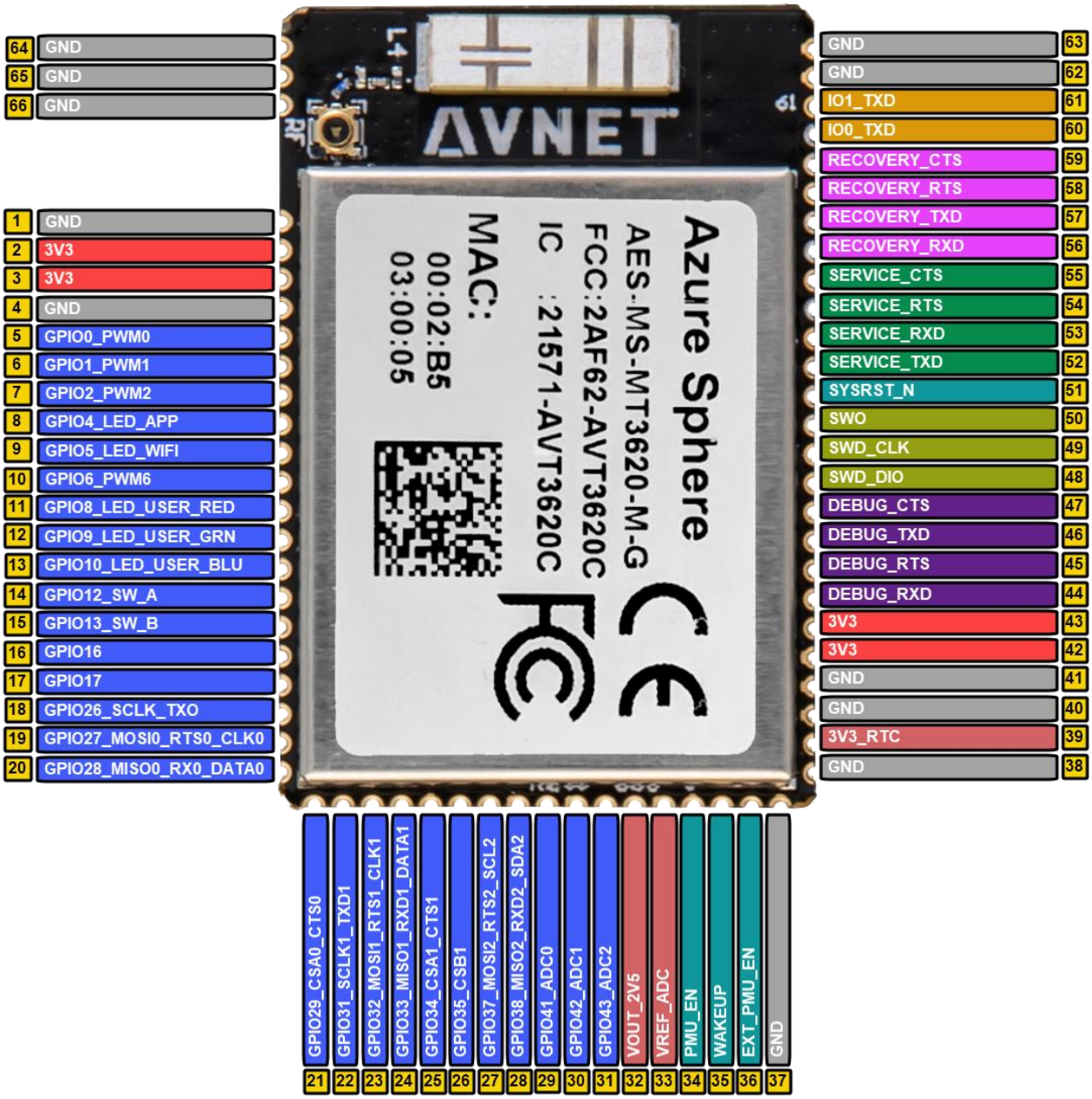

Figure 13 – Azure Sphere Module Pinout

Azure Sphere Module Pinout Detail

Module Pad	MT3620 Pad	MT3620 Net Name	I/O	Pin Function	Pre-Assigned Starter Kit Function=BLUE
1		GND	GND		
2	2,3	3V3	Power		
3	2,3	3V3	Power		
4			GND		
5	13	GPIO0_PWM0	I/O	GPIO / INT in / PWM out	PWM CLICK1
6	14	GPIO1_PWM1	I/O	GPIO / INT in / PWM out	PWM CLICK2
7	15	GPIO2_PWM2	I/O	GPIO / INT in / PWM out	INT_CLICK
8	17	GPIO4_PWM4	I/O	GPIO / INT in / PWM out	GPIO4_LED_APP
9	18	GPIO5_PWM5	I/O	GPIO / INT in / PWM out	GPIO5_LED_WIFI
10	19	GPIO6_PWM6	I/O	GPIO / INT in / PWM out	INT_LSM6DSO
11	21	GPIO8_PWM8	I/O	GPIO / INT in / PWM out	GPIO8_LED_USER_RED
12	22	GPIO9_PWM9	I/O	GPIO / INT in / PWM out	GPIO9_LED_USER_GRN
13	25	GPIO10_PWM10	I/O	GPIO / INT in / PWM out	GPIO10_LED_USER_BLU
14	27	GPIO12	I/O	GPIO / INT in	GPIO12_SW_A
15	28	GPIO13	I/O	GPIO / INT in	GPIO13_SW_B
16	31	GPIO16	I/O	GPIO / INT in	RST CLICK1
17	32	GPIO17	I/O	GPIO / INT in	RST CLICK2
18	39	GPIO26_SCLK0_TXD0	I/O	GPIO / ISU0	UART TXD
19	40	GPIO27_MOSI0_RTS0_SCL0	I/O	GPIO / ISU0	UART RTS / I2C0
20	42	GPIO28_MISO0_RXD0_SDA0	I/O	GPIO / ISU0	UART RXD / I2C0
21	43	GPIO29_CSA0_CTS0	I/O	GPIO / ISU0	UART CTS
22	46	GPIO31_SCLK1_TXD1	I/O	GPIO / ISU1	SPI SCLK / UART1
23	47	GPIO32_MOSI1_RTS1_SCL1	I/O	GPIO / ISU1	SPI MOSI / UART1 / I2C1
24	48	GPIO33_MISO1_RXD1_SDA1	I/O	GPIO / ISU1	SPI MISO / UART1 / I2C1
25	49	GPIO34_CSA1_CTS1	I/O	GPIO / ISU1	SPI CS #1 / UART1
26	50	GPIO35_CSB1	I/O	GPIO / ISU1	SPI CS #2
27	52	GPIO37_MOSI2_RTS2_SCL2	I/O	GPIO / ISU2	I2C
28	53	GPIO38_MISO2_RXD2_SDA2	I/O	GPIO / ISU2	I2C
29	58	GPIO41_ADC0	I/O	GPIO / ADC in	AMBIENT LIGHT SENSOR
30	59	GPIO42_ADC1	I/O	GPIO / ADC in	AN CLICK1
31	60	GPIO43_ADC2	I/O	GPIO / ADC in	AN CLICK2
32	66	VOUT_2V5	AO		
33	67	VREF_ADC	AI		min 1.8V, max 2.5V
34	81	PMU_EN	I		pull-up on module
35	70	WAKEUP	I	Ext. Wakeup Input	pull-up on module
36	69	EXT_PMU_EN	O	Ext. 3V3 regulator enable	
37		GND	GND		

Module Pinout (continued)

Module Pad	MT3620 Pad	MT3620 Net Name	I/O	Pin Function	Pre-Assigned Starter Kit Function=BLUE
38		GND	GND		
39	71	3V3_RTC	Power		min 2.50 V, max 3.63V
40		GND	GND		
41		GND	GND		
42	88,89	3V3	Power		
43	88,89	3V3	Power		
44	94	DEBUG_RXD	I	Debug UART	**DEBUG_RXD**
45	96	DEBUG_RTS	O	Debug UART (pulled-down / FTDI controlled strapping state on Starter Kit)	**DEBUG_RTS**
46	95	DEBUG_TXD	O	Debug UART (pulled-down on module)	**DEBUG_TXD**
47	97	DEBUG_CTS	I	Debug UART	**DEBUG_CTS**
48	98	SWD_DIO	I/O	CM4F SWD	**SWD_DIO**
49	99	SWD_CLK	I	CM4F SWD	**SWD_CLK**
50	100	SWO	O	CM4F SWD	**SWO**
51	125	SYSRST_N	I		**SYSRST_N**
52	127	SERVICE_TXD	O	Service UART	**SERVICE_TXD**
53	129	SERVICE_RXD	I	Service UART	**SERVICE_RXD**
54	128	SERVICE_RTS	O	Service UART	**SERVICE_RTS**
55	130	SERVICE_CTS	I	Service UART	**SERVICE_CTS**
56	134	RECOVERY_RXD	I	Recovery UART	**RECOVERY_RXD**
57	135	RECOVERY_TXD	O	Recovery UART (PU on module)	**RECOVERY_TXD**
58	136	RECOVERY_RTS	O	Recovery UART (pulled-down on module)	**RECOVERY_RTS**
59	137	RECOVERY_CTS	I	Recovery UART	**RECOVERY_CTS**
60	139	IO0_GPIO86/IO0_TXD	O	IO0_GPIO / IO0_TXD (pulled-down on module)	**IO0_TXD**
61	143	IO1_GPIO90/IO1_TXD	O	IO1_GPIO / IO1_TXD (pulled-down on module)	**IO1_TXD**
62 - 66		GND	GND	GND pour	
67		PADGND	GND	Thermal pad for MT3620	

15 Appendix-B: Running Pre-Compiled Example Applications

Pre-compiled, production-signed applications can be side-loaded to the MT3620 from **Azure Sphere SDK** without need to rebuild, sign and download the executable file from Microsoft Visual Studio.

15.1 GPIO Test Application

Note! For best results this application should be run with “Tester” Click boards fitted to Click sockets #1 and #2 (The application if run without these Click boards, will only sequnce the onboard LEDs)

Using Windows Explorer, copy the following “production-signed” application executable file into your **C:\TEST** folder
`AvnetDevBoardTestApp_ps.imagepackage`

Launch the Azure Sphere Developer Command Prompt, then cut + paste the following command to change directories to this **C:\TEST** folder
`cd C:\TEST`

At the Azure Sphere prompt, cut + paste the following command to side-load (via USB) this application onto the MT3620 device:

```
azsphere device sideload deploy -p AvnetDevBoardTestApp_ps.imagepackage
```

The GPIO test application configures all MT3620 I/O ports to be GPIO outputs and walks a ‘1” value across these outputs. The resulting test pattern sequences the GPIOs as follows:

1) down the pins of **socket #1 left-side**
2) down the pins of **socket #1 right-side**
3) down the pins of **socket #2 left-side**
4) down the pins of **socket #2 right-side**
5) APP LED, WLAN LED, RGB-Red, RGB-Green, RGB-Blue

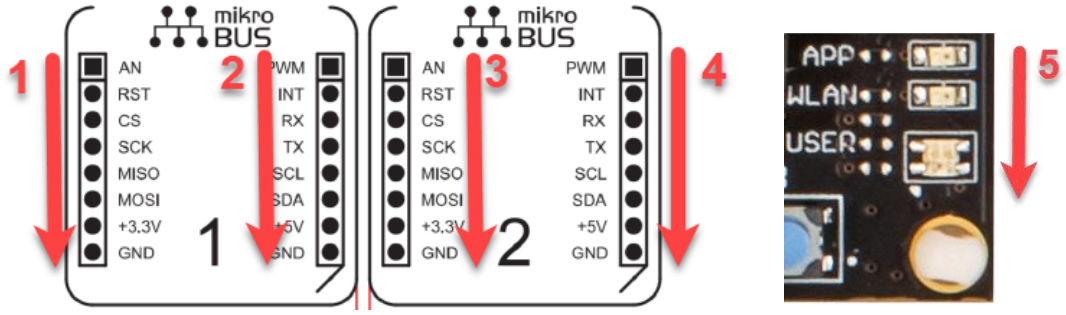

Notes:

- Socket #1 and socket #2 share some GPIOs (SCK, MISO, MOSI, INT, RX, TX, SCL, SDA) LEDs for these GPIOs will illuminate at the same time on both Click sockets.
- The test sequence can be repeated by pressing the A or B buttons
- When finished this test, delete this side-loaded app from the device:

```
azsphere device sideload delete
```

15.2 iPerf3 Test Application to Check Wi-Fi Performance

Using Windows Explorer, create a **C:\TEST** folder, then copy the following "production-signed" application executable file into this folder
`iperf3_ps.imagepackage`

Change directories to this **C:\TEST** folder using the following command

```
cd C:\TEST
```

Side-load (via USB) the production signed image onto the MT3620 device using the following command (the device does ***not*** need to be in debug mode!)

```
azsphere device sideload deploy -p iperf3_ps.imagepackage
```

iPerf3 Server:

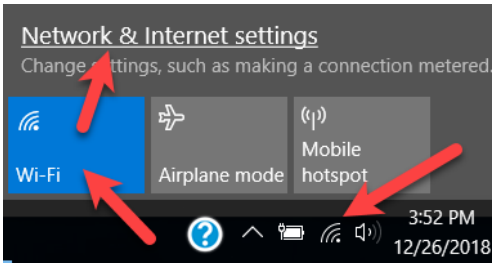

On the development computer, do the following:

1) Download and unzip the iPerf 3.1.3 Windows application from https://iperf.fr/iperf-download.php

2) Unzip **iperf-3.1.3-win64.zip** to **C:\Test**

3) Turn-off Wi-Fi on the development computer

4) Connect the ethernet port of the test computer via CAT-5 cable connection to the Wi-Fi Router

5) Configure the **ethernet adaptor** to have static IP address of **192.168.1.35**
(plus the other highlighted settings shown below…)

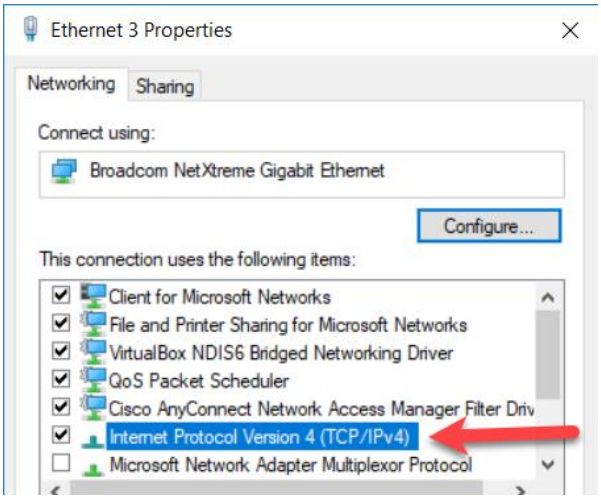

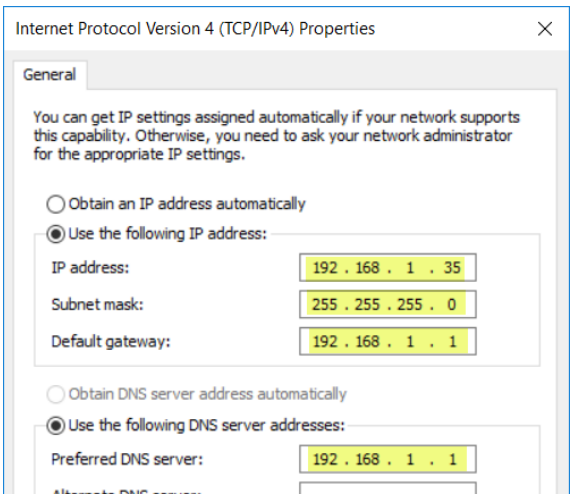

Now launch the **iperf3 server** on this test computer using the following command:
`iperf3 -s`

iPerf3 Client:

Use the following command to configure the Wi-Fi settings:
(replace **??????** with the applicable credentials)

```
azsphere device wifi add -ssid ?????? -key ???????
```

Note: The DUT Sphere module **must** connect to the same subnet as the test computer!

After Wi-Fi connection is established, reported iPerf bitrates should start appearing in the console window

```
*********************************************************
*      Starting iPerf3 Server on the Test Computer      *
*********************************************************
-----------------------------------------------------------
Server listening on 5201
-----------------------------------------------------------
Accepted connection from 192.168.1.200, port 47070
[  5] local 192.168.1.35 port 5201 connected to 192.168.1.200 port 47072
[ ID] Interval           Transfer     Bandwidth
[  5]   0.00-1.00   sec  4.85 MBytes  40.7 Mbits/sec
[  5]   1.00-2.00   sec  5.25 MBytes  44.0 Mbits/sec
[  5]   2.00-3.00   sec  5.36 MBytes  45.0 Mbits/sec
[  5]   3.00-4.00   sec  5.33 MBytes  44.6 Mbits/sec
[  5]   4.00-5.00   sec  5.31 MBytes  44.6 Mbits/sec
[  5]   5.00-6.00   sec  5.31 MBytes  44.6 Mbits/sec
[  5]   6.00-7.00   sec  5.16 MBytes  43.3 Mbits/sec
[  5]   7.00-8.00   sec  5.18 MBytes  43.5 Mbits/sec
[  5]   8.00-9.00   sec  5.15 MBytes  43.2 Mbits/sec
[  5]   9.00-10.00  sec  5.22 MBytes  43.8 Mbits/sec
[  5]  10.00-10.02  sec  78.8 KBytes  39.0 Mbits/sec
- - - - - - - - - - - - - - - - - - - - - - - - -
[ ID] Interval           Transfer     Bandwidth
[  5]   0.00-10.02  sec  0.00 Bytes  0.00 bits/sec                  sender
[  5]   0.00-10.02  sec  52.2 MBytes  43.7 Mbits/sec                  receiver
.
Restart iPerf3 Test or Quit ? [ r / q ]
Type input: _
```

Notes:
The iPerf3 Client and iPerf3 Server **must** both be on the same network sub-net
ie, connected via same network router

If the reported bandwith (bitrate) is zero, use:
CTL+C to stop the iPerf3 application, then
`iperf3 -s` to restart the iPerf3 Server application (on the development computer)

15.3 Azure IoT Central - Sphere Starter Kit Out-of-Box Demo

Note! The procedure for this reference design is detailed in a three-part blog located at:
http://avnet.me/mt3620-kit-OOB-ref-design-blog

The "Out-of-Box" Azure IoT Central application performs the following functions:

1) The MT3620 application periodically samples XYZ Accelerometer, XYZ Gyro and temperature measurements (via the main I2C bus) from the STMicro LSM6DSO iNemo combo sensor, as well as barometric pressure and temperature measurements from the LPS22HH sensor (a secondary I2C bus exists between the LPS22HH sensor and the LSM6DSO, which acts as a sensor hub that samples and buffers measurements from sensors on the secondary I2C bus independently of the MT3620 SoC)

2) The MT3620 application reports the current state of the User-A and User-B pushbutton switches

3) The MT3620 application periodically samples the network-related status (Wi-Fi SSID, BSSID and Wi-Fi frequency / channel)

4) The MT3620 application reports the multiple sensor measurements and status information:

   a) via GDB to local console output in Visual Studio

```
Opening Starter Kit Button A as input (GPIO12)
Opening Starter Kit Button B as input (GPIO13)
SSID: AvnetIOTDEMO
Frequency: 2462MHz
bssid: 00:15:ff:7d:a8:5f

LSM6DSO: Acceleration [mg]  : 62.8300, -36.9660, 1002.7180
LSM6DSO: Angular rate [dps] : 0.00, 0.00, 0.00
LSM6DSO: Temperature  [degC]: 24.11
LPS22HH: Pressure     [hPa] : 1063.18
LPS22HH: Temperature  [degC]: 23.08
```

   b) via Wi-Fi over a secure internet connection to Azure IoT, from where these measurements:
      - can be inspected in the chart visualization provided by **Azure Time Series Insights**
      - are displayed in the visualization dashboard provided by **Azure IoT Central**

5) The Azure IoT Central application also provides a simple user-interface for remote control of selected MT3620 GPIOs on the Starter Kit:

   - USER RGB : Red, Green and Blue LEDs *(GPIO8, GPIO9, GPIO10)*
   - APP LED : Yellow LED *(GPIO4)*
   - WLAN LED : Yellow LED *(GPIO5)*
   - CLICK SKT #1 : Relay #1 and Relay #2 outputs *(GPIO34, GPIO0)*

6) A sampling of screen-shots are shown on the next two pages….
   - Please refer to the 3-part blog for full instructions:
   http://avnet.me/mt3620-kit-OOB-ref-design-blog

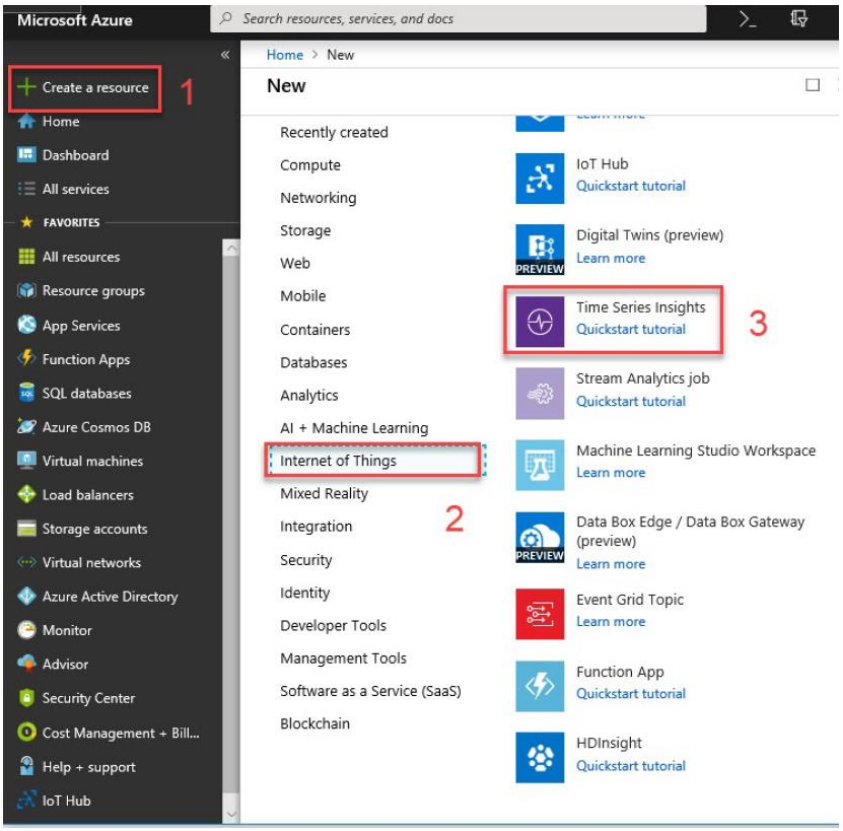
Microsoft Azure
Search resources, services, and docs
Home > New
Create a resource
1
Home
Dashboard
All services
FAVORITES
All resources
Resource groups
App Services
Function Apps
SQL databases
Azure Cosmos DB
Virtual machines
Load balancers
Storage accounts
Virtual networks
Azure Active Directory
Monitor
Advisor
Security Center
Cost Management + Bill...
Help + support
IoT Hub
New
Recently created
Compute
Networking
Storage
Web
Mobile
Containers
Databases
Analytics
AI + Machine Learning
Internet of Things
Mixed Reality
Integration
2
Security
Identity
Developer Tools
Management Tools
Software as a Service (SaaS)
Blockchain
IoT Hub
Quickstart tutorial
Digital Twins (preview)
Learn more
Time Series Insights
Quickstart tutorial
3
Stream Analytics job
Quickstart tutorial
Machine Learning Studio Workspace
Learn more
Data Box Edge / Data Box Gateway (preview)
Learn more
Event Grid Topic
Learn more
Function App
Quickstart tutorial
HDInsight
Quickstart tutorial

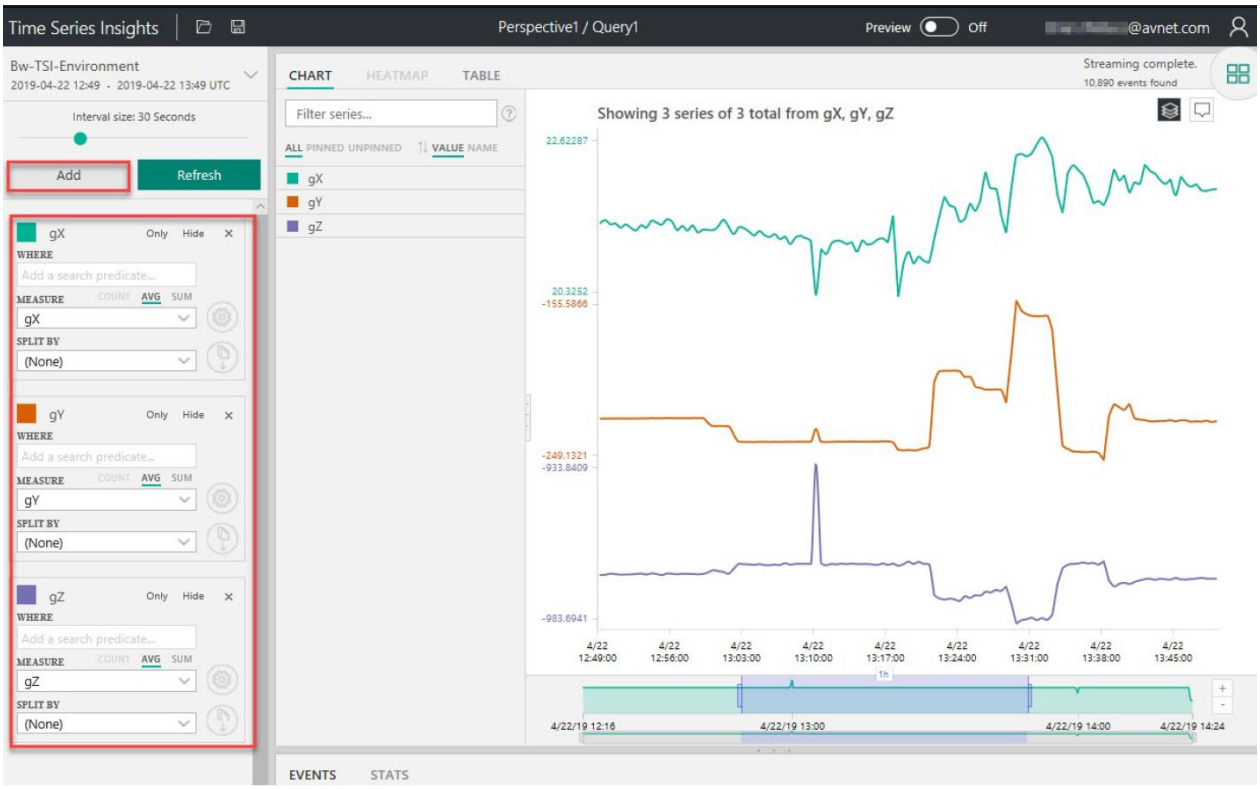
Time Series Insights
Perspective1 / Query1
Preview
Off
@avnet.com
Bw-TSI-Environment
2019-04-22 12:49 - 2019-04-22 13:49 UTC
Interval size: 30 Seconds
Add
Refresh
gX
Only
Hide
WHERE
Add a search predicate...
MEASURE
COUNT
AVG
SUM
gX
SPLIT BY
(None)
gY
gZ
CHART
HEATMAP
TABLE
Filter series...
ALL
PINNED
UNPINNED
VALUE
NAME
Streaming complete.
10,890 events found
Showing 3 series of 3 total from gX, gY, gZ
22.62287
20.3252
-155.5866
-249.1321
-933.8409
-983.6941
4/22 12:49:00
4/22 12:56:00
4/22 13:03:00
4/22 13:10:00
4/22 13:17:00
4/22 13:24:00
4/22 13:31:00
4/22 13:38:00
4/22 13:45:00
4/22/19 12:16
4/22/19 13:00
4/22/19 14:00
4/22/19 14:24
EVENTS
STATS

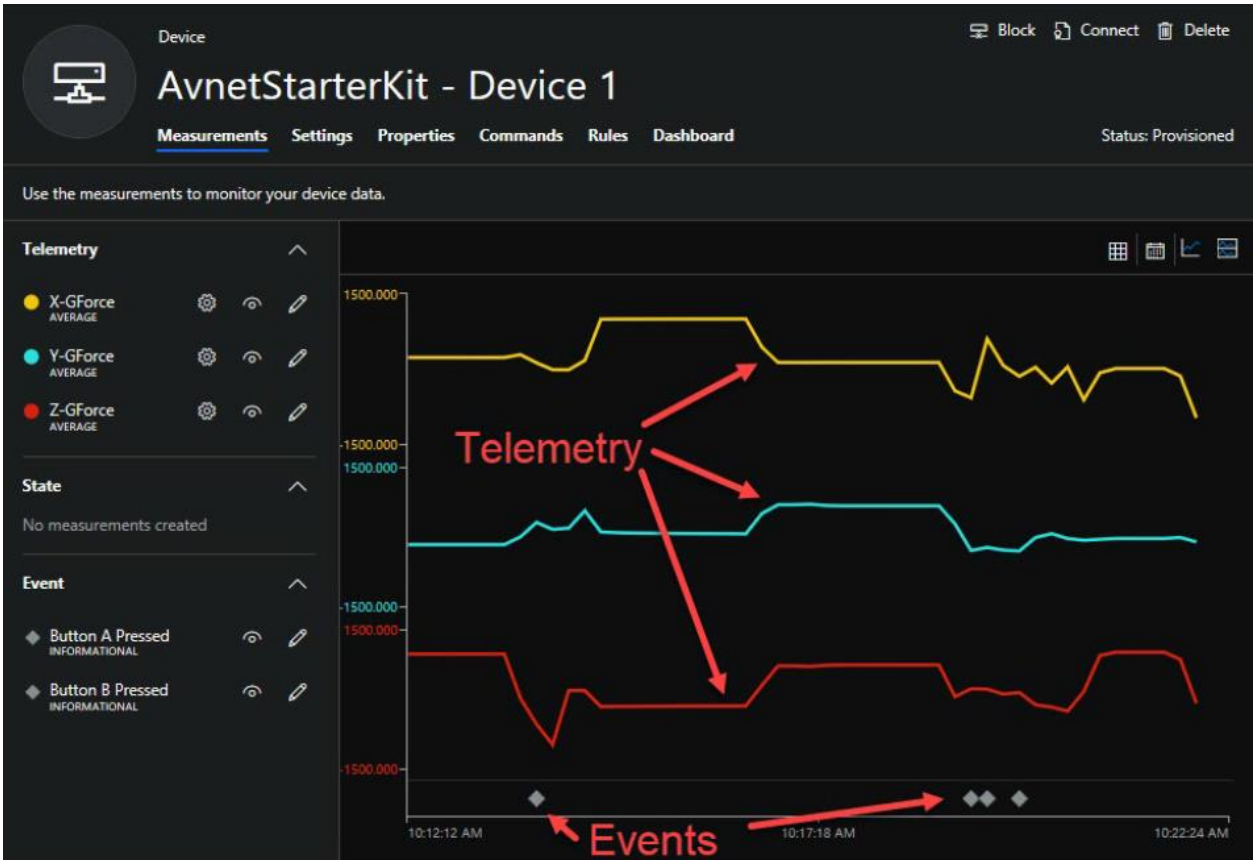
Device
AvnetStarterKit - Device 1
Block
Connect
Delete
Measurements
Settings
Properties
Commands
Rules
Dashboard
Status: Provisioned
Use the measurements to monitor your device data.
Telemetry
X-GForce
AVERAGE
Y-GForce
AVERAGE
Z-GForce
AVERAGE
State
No measurements created
Event
Button A Pressed
INFORMATIONAL
Button B Pressed
INFORMATIONAL
1500.000
Telemetry
Events
10:12:12 AM
10:17:18 AM
10:22:24 AM

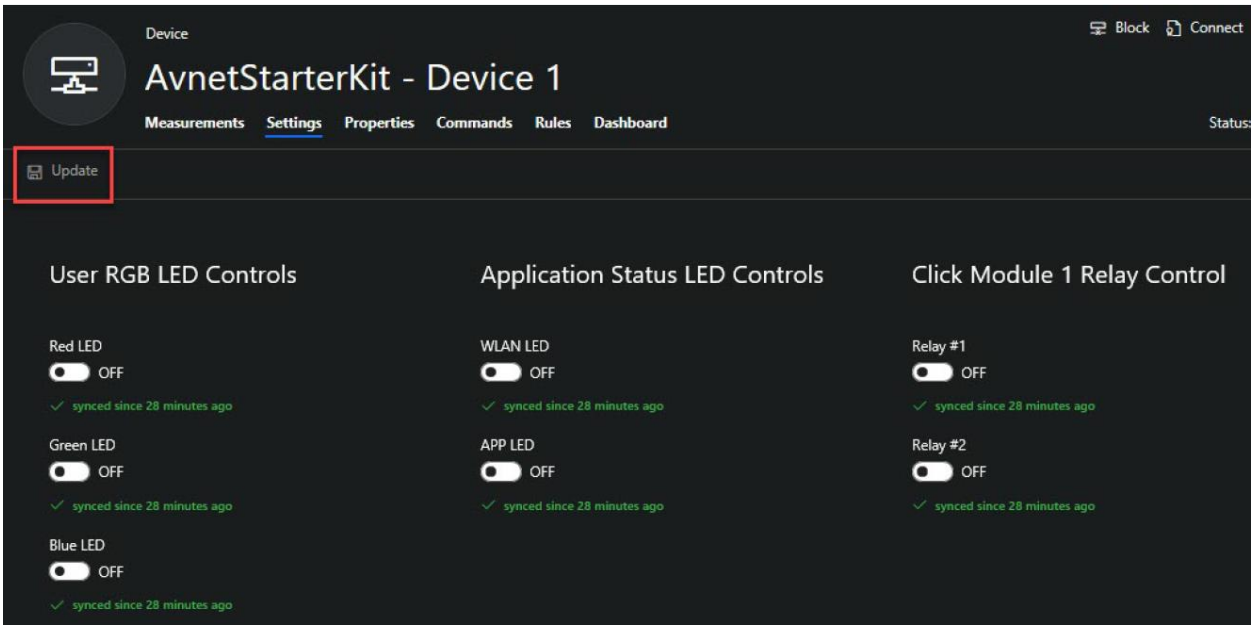
Device
AvnetStarterKit - Device 1
Block
Connect
Measurements
Settings
Properties
Commands
Rules
Dashboard
Update
User RGB LED Controls
Red LED
OFF
synced since 28 minutes ago
Green LED
OFF
synced since 28 minutes ago
Blue LED
OFF
synced since 28 minutes ago
Application Status LED Controls
WLAN LED
OFF
synced since 28 minutes ago
APP LED
OFF
synced since 28 minutes ago
Click Module 1 Relay Control
Relay #1
OFF
synced since 28 minutes ago
Relay #2
OFF
synced since 28 minutes ago